

เอกสารแนบ 25

SHE Plan & SHE Procedures

PTTLNG Nong Fab LNG Receiving Terminal Project

SHE PLAN FOR CONSTRUCTION

Doc Class Z

[redacted]

This document is the property of SPCC who will safeguard its rights according to the civil and penal provisions of the Law.

Revision list:

Rev. Nr	Modifications:
R1	First Issue
F1	Issue for Final implementing Client's comments received and improved sec: 10 and 11

This document is the property of SPCC who will safeguard its rights according to the civil and penal provisions of the Law.

INDEX

1.	SCOPE	4
2.	DEFINITIONS AND ABBREVIATION	5
3.	REFERENCE DOCUMENTS	7
4.	ROLES AND RESPONSIBILITIES	10
5.	DOCUMENT UPDATING AND DISTRIBUTION	15
6.	SHE POLICIES	15
7.	SHE MANAGEMENT SYSTEM	19
8.	SHE ACTIVITIES	27

This document is the property of SPCC who will safeguard its rights according to the civil and penal provisions of the Law.

1. SCOPE

This Plan is the main document for the application of the Safety Health and Environmental Management System (SHE MS) during the Construction phase of the PROJECT, for the scope of the present document the Environmental issue relevant to the planning activities have been reported into the details within the Environmental Management Plan doc n 122018-SPCC-C-SH-PR-0032.

Purpose of the present document is define the programs that shall be developed to enable the CONTRACTOR management to effectively sustain its commitment to Safety and Health throughout the construction phase.

Ensure the Health and Safety of the people and protection of the Environment throughout each phase of the Project will be a management responsibility and a prime consideration in all operations and activities undertaken under CONTRACTOR responsibility.

Scope of this document is:

- Identify and comply with all applicable SHE Local Laws, EIA Requirement, Project Standards and Contractual requirements, to ensure that the Project complies with them;
- Ensure the application of the CONTRACTOR Health and Safety Management System
- Define the SHE organization of the Project
- Define the SHE objectives of the Project;
- Define the SHE deliverables foreseen for the Project
- Define the SHE activities will be carried out during the Project execution, in order to reach the SHE objectives and meet the identified requirements.
- Define SHE data to be monitored and reported (number of injuries, number of SHE meetings, number of spills etc.) in order to immediately correct any deficiency of the System so ensure the continuous improvement of the SHE performance.

This SHE Plan is intended to be complimentary to the general code of practice and to the existing statutory regulations of Local Authorities, including Labour Code, Legislation with regard to medical, first aid, safety and training requirements.
All CONTRACTORs / SUBCONTRACTORs shall adhere to this SPCC SHE Plan and appoint their SHE Manager(s) and SHE Officers or so acting that must be approved prior to commencement of the work they are contacted to perform for SPCC.
The SPCC Site Manager will ensure that this document is regularly reviewed at site. All parties will be informed of subsequent revisions.

This document is the property of SPCC who will safeguard its rights according to the civil and penal provisions of the Law.

2. DEFINITIONS AND ABBREVIATION

General Project description are reported in “Project Description, Abbreviations and Definitions” (Doc. no.122018-SPCC-C-PM-GE-0002).

2.1. Definition and abbreviation specific for this document

LiHS	Leadership in Health & Safety
HRA	Health Risk Assessment
LSR	Life Saving Rules

3. CONTRACTOR LIFE SAVING RULES (LSR)


Permit to Work


Seat Belt


Smoking


Alcohol and Drugs


Confined Space


Cell Phone Use and Speed Limits


Dropped Objects


Excavation


Personal Flotation Devices


Gas Test

This document is the property of SPCC who will safeguard its rights according to the civil and penal provisions of the Law.



Journey Management



Lift Plan



Overhead Electric Power Lines



Moving and Energised Equipment



Suspended Loads



System Override



Verify isolation



Working at Height

This document is the property of SPCC who will safeguard its rights according to the civil and penal provisions of the Law.

4. REFERENCE DOCUMENTS

4.1. PTTLNG Documentation

PTTLNG'S References	Doc. N°
1602088-32016-CV-TS-003-F0	Specification for Drainage System
1602088-32016-GE-005-F0	PROJECT Reference Codes and Standards
1602088-32016-MG-TS-004-F0	Specification for Acoustical Insulation
1602088-32016-PM-GE-001-F4	PROJECT Procedures and Administrative Requirements (General PROJECT Requirement) Section 9. SHE
1602088-32016-PM-GE-008-F0	List of Documents to be Submitted During Detail Design for Each Discipline. Appendix F. Section 1.5 SHE
1602088-32016-PM-GE-015-F0	Site Safety and Security Procedure (Template)
1602088-32016-PM-GE-019-F0	Change Procedure
1602088-32016-PM-GE-028-F0	Environmental Impact Assessment (EIA). Appendix E-1 REPLACED by the Approved EIA
1602088-32016-PM-RPT-103-F0	PTT Environmental Management Plan
1602088-32016-PM-RPT-104-F0	PTT Personnel Protection
1602088-32016-PM-RPT-105-F0	PTT Environmental Specification
1602088-32016-PM-RPT-106-F1	PTT SHE Legislation
1602088-32016-PM-RPT-109-F1	PTT Corporate Worksite Health, Safety & Security Requirements
1602088-32016-PM-RPT-110-F0	PTT Corporate SH&E Pre-Qualification Expectations
1602088-32016-PM-RPT-111-F0	PTT Corporate Work Site Environmental Requirements
1602088-32016-PM-RPT-113-F0	PTT Safety and Health Management Plan
1602088-32016-CS-RPT-024-F0	Guideline for SIL Study
1602088-32016-CS-RPT-025-F0	Safety Requirement Specification (SRS)
1602088-32016-PM-RPT-009-F2	QRA Report

4.2. CONTRACTOR Project Documentation

Main documents of CONTRACTOR applicable to the Construction activities:

- PROJECT SHE Plan 122018-SPCC-C-SH-PR-0001
- SHE Procedures (detail sect 3.2.1) 122018-SPCC-C-SH-PR-0002
- SHE Training procedure 122018-SPCC-C-SH-PR-0003
- Environmental Management Procedure 122018-SPCC-C-SH-PR-0004
- Health Management Procedures and Planning 122018-SPCC-C-SH-PR-0005
- PPE Management procedure 122018-SPCC-C-SH-PR-0006
- Confined Space Procedure 122018-SPCC-C-SH-PR-0007
- Crane, Rigging and lifting, Scaffolding, Excavation work safe Procedure 122018-SPCC-C-SH-PR-0008
- Hazardous Chemicals and Substance Procedure 122018-SPCC-C-SH-PR-0009
- Emergency Preparedness and Response Procedure 122018-SPCC-C-SH-PR-0010
- Hand Tools and Machinery Safety Procedure 122018-SPCC-C-SH-PR-0011
- Work Permit Program 122018-SPCC-C-SH-PMT-0012

This document is the property of SPCC who will safeguard its rights according to the civil and penal provisions of the Law.

- SHE AUDIT procedure 122018-SPCC-C-SH-PR-0013
- Incident Notification and Investigation procedure 122018-SPCC-C-SH-PR-0014
- Simultaneous Operation Procedure 122018-SPCC-C-SH-PR-0015
- SHE Action Tracking System Report 122018-SPCC-C-SH-RPT-0016
- Emergency Preparedness and Response Plan for construction 122018-SPCC-C-SH-PR-0017
- SHE RISK Assessment and JSEA procedure 122018-SPCC-C-SH-PR-0018
- Safety Health Environment Policy 122018-SPCC-C-SH-PR-0019
- SHE Requirements for SUBCONTRACTOR and Vendors 122018-SPCC-C-SH-PR-0020
- Alcohol & Drug Policy 122018-SPCC-C-SH-PR-0022
- Waste Management Plan 122018-SPCC-C-SH-PR-0023
- Environmental Monitoring Plan 122018-SPCC-C-SH-PR-0024
- Spill Contingency Plan 122018-SPCC-C-SH-PR-0025
- Security Plan 122018-SPCC-C-SH-PR-0029
- SHE Construction Manual 122018-SPCC-C-SH-PR-0030
- Environmental Management Plan 122018-SPCC-C-SH-PR-0032
- SHE Monthly Report 122018-SPCC-C-SH-PR-0037

4.2.1. SHE Procedures detail content of doc n. 122018-SPCC-C-SH-PR-0002

Detail content of the SHE Procedures doc n. 122018-SPCC-C-SH-PR-0002

Competent Designation Form
Disciplinary actions
Heat stress Preventions
Incentive Scheme Program
Safety Inspection
Management Safety Walk
Night Work Control
Office Safety
Noise
Preventive Maintenance Program
Safety Observation Program
Safety Signs
Color Coding
Lock Out – Tag Out
Control and Use of Plant Equipment
Fall Prevention and protection Program
Housekeeping
Manual handling
Portable tools
Access control requirement in hazardous classified areas
Safe transportation
Site SHE Committee Meeting

This document is the property of SPCC who will safeguard its rights according to the civil and penal provisions of the Law.

4.3. National Laws and Regulations

Please refer to PROJECT SHE Plan doc n. **122018-SPCC-C-SH-PR-0001**

4.4. OTHER CONTRACTOR's SHE Documentation

- "Leadership in Health and Safety" (LiHS)
- CONTRACTORLife Saving Rules (LSR)

This document is the property of SPCC who will safeguard its rights according to the civil and penal provisions of the Law.

5. ROLES AND RESPONSIBILITIES

5.1. Project SHE Team

A dedicated SHE Team appointed for the Project will ensure to meet the Project SHE Objectives through implementation of procedures and technical activities.

This Team will interface with all relevant departments to guarantee that all documents produced and activities performed during the execution of the Project comply with the SHE Plan, SHE Requirements and objectives.

The SHE Team and names, along with the functions and responsibilities, is detailed in the specific Project Document “Project Organization Procedure” section attachment Site - S2

5.2. Main Management Roles and Responsibilities

According to the scope of this document, Construction phase, the following roles are responsible for:

5.2.1. CONTRACTOR Project Director (PD)

The most senior position in the overall project is the Project Director

The overall Project Director ensures the achievement of established project health and safety objectives assigned.

The Project Director function includes:

- representing CONTRACTOR with the PTTLNG, Licensors, Partners and SUBCONTRACTORs, and managing all the SHE contractual aspects;
- ensuring the review of SHE contractual documents;
- defining SHE project strategies;
- supervising site activities;
- supervising project activities regarding aspects relating to health, safety and environmental protection, through the project organization positions;
- promoting LiHS and Life Saving Rules campaigns implementation during project execution;
- Add other duties if deemed necessary.

5.2.2. CONTRACTOR SITE Manager (SM)

The SM for Construction phase/activity ensures, reporting to the Project Director the achievement of the established health and safety objectives for the assigned phase/activities in order to meet the contractual obligations, objectives set by CONTRACTOR Organization and help achieve the overall objectives for the project managed by the Project Director.

Duties include:

- representing, insofar as within remit, the CONTRACTOR with PTTLNG, Licensors, Partners and SUBCONTRACTORs, and also managing all the SHE contractual aspects;
- ensuring, insofar as within remit, the review of SHE contractual documents;

This document is the property of SPCC who will safeguard its rights according to the civil and penal provisions of the Law.

- defining, based on the instructions of the Project Director and in accordance with the project's overall objectives and strategies, the SHE strategies for assigned phase/activities and supervising the planning and scheduling of activities
- approval of Construction Safety Manual, ensuring its implementation;
- ensuring compliance with applicable and/or local SHE laws and regulation,
- undertaking a leadership role in the SHE process;
- Chair the site safety Committee dealing directly with the SHE Officer in professional level nominated for the project.
- setting standards for safe and healthy execution of construction works, and ensure full dedication by all personnel to Zero Accident Tolerance;
- ensuring that all line management and supervision conduct their duties in a manner which supports the Zero Accident Tolerance philosophy;
- ensuring the safe and healthy completion of all construction activities;
- ensuring sufficient resources are available, in terms of equipment and qualified personnel, to effectively manage SHE issues;
- ensuring that all site personnel are competent, qualified and adequately trained to perform duties given to them during the course of the construction phase;
- ensuring the provision of adequate fire prevention and protection measures and equipment;
- ensure that basic site medical facilities (first aid) and medical support are in place before and throughout constriction activities;
- ensuring that the project ERP is fully implemented;
- ensuring that CONTRACTOR line management participates, contributes actively and exercises leadership in its respective individual and collective project safety meetings;
- ensuring the CONTRACTOR PPE needs are adequately funded;
- ensuring that every work activity performed by the SUBCONTRACTOR, vendors and suppliers (if any) is executed in a safe and controlled manner;
- establishing and maintaining a direct line of communication with the CONTRACTOR Field SHE manager (FSHEM);
- implementing an employee incentive scheme;
- conducting unscheduled meetings as necessary at his discretion or on request of the CONTRACTOR Field SHE Manager (FSHEM);
- leading investigations into serious accidents or potentially serious incidents;
- supporting "accident reporting" motivation;
- implementing LiHS and Life Saving Rules campaigns during the execution of the project;

Note: in case SM is temporary not be available at Site, he will nominate a substitute and will communicate it to all concerned.

Site Manager is responsible for the interfaces with:

- PTTLNG
- Police, Civil defence and Hospital;
- Local Authorities, Municipality;
- SUBCONTRACTORs;
- Suppliers and Vendors.

Site Manager case by case availes himself of the support of the Community and Interface Manager

5.2.3. CONTRACTOR SHE Manager (SHEM)

This document is the property of SPCC who will safeguard its rights according to the civil and penal provisions of the Law.

The project SHE Manager (SHEM), reporting to the senior position in the overall Project Director (PD), shall manage and supervise Project activities within their remit relating to health, safety and the environment during Project development phase, ensuring that the SHE MS is correctly applied.

Construction's phase duties include:

- definition of Project SHE objectives in accordance with PTTLNG and CONTRACTOR SHE Policy and contractual requirements;
- ensuring preparation and the first release of the SHE Plan and Manual for the construction phase;
- coordinate and lead SHE Audit and Review activities for the project (Home Office and site);
- be the prime SPCC contact for SHE matters.

5.2.4. CONTRACTOR DEPUTY SHEM

Deputy SHE Manager acting as SHE Manager during his absence at site, reports to the senior position at site Site Manager (SM), he shall manage and supervise Project activities within their remit relating to health, safety and the environment during Project starting from the Construction phase, ensuring that the Project SHE MS is correctly applied.

- assisting construction teams in Risk Management and Occupational Safety Risk Assessment;
- ensuring that CONTRACTOR SITE Manager (SM), Construction manager (CM) and Discipline Superintendents (DS) are supported in the field controls of CONTRACTORs/Suppliers with regard to SHE aspects;
- ensuring the qualification of the set of authorization processes relevant to SHE areas required for the site (e.g. water discharges, waste, etc.) and responsibilities for their implementation;
- updating the specific site's SHE Plans, and procedures and checks that they are correctly implemented by CONTRACTOR and SUBCONTRACTOR personnel throug periodic audit at site.
- Checking all SUBCONTRACTOR's documentation in order to meet the client requirement for the Construction activities.
- Assuring weekly checks of safety conditions and monthly checks of work equipment and protective devices;
- defining emergencies scenarios, Emergency Response Plans and arrange emergency drills;
- Update and check the CONTRACTORs' SHE Plan and Manual for Construction and submits them to the CONTRACTOR Site Manager (SM) for approval;
- providing information and training of PTTLNG personnel and CONTRACTOR managers responsible for SHE;
- participating in the analysis of the causes of any accidents or injuries and also ensures the collection of data;
- supporting Project Director for the implementation of LiHS and Life Saving Rules campaigns at site.
- Verify the reports coming from the SHE Officers/Engineers
- Verify and issue the SHE Monthly report according to the contratual information required by 7th of each month to PTTLNG through the CONZOL system.
- Ensure the CONTRACTOR internal reporting according to Annex 1 by the 3rd day of each

This document is the property of SPCC who will safeguard its rights according to the civil and penal provisions of the Law.

month;

- ensure that reporting of mandatory SHE matters to the appropriate regulatory.
- authorities is timely and accurate.
- liaise with the SUBCONTRACTORS' SHE Manager(s);
- notifying the SHEM and the SM, of any SHE related incident/accident involving personnel, equipment, property or environment;
- DSHEM is responsible for deliver SHE documents and information at site to SUBCONTRACTORS and requests to them to sign on the first page of each document shared in order to onfirm the receipt.

for the Emergency Response Plan:

- report SHE incidents immediately to the SM;
- ensure plan update (scenarios, names, numbers, positions etc) and exist for dealing with potential emergency situations;
- ensure SUBCONTRACTORS have appropriate fire prevention procedures in their SHE documents, and that they apply them;
- investigate injury, damage and near miss, accidents independent of SUBCONTRACTORS SHE Manager and/or jointly with them.

for the SHE Meetings the deputy SHE manager:

- prepare and minute the Site Management Safety Meeting;
- organise, attend and participate in relevant SHE Meetings (Supervisor's Safety Meeting);
- support supervisors and foremen with specific meeting format and content as necessary;
- generate a monthly log of meetings scheduled, meetings held, topics and attendance and submit the log to the SHEM and the SM.

He/She shall conduct regular site SHE Audits, Reviews and Inspections according to this plan. The objectives are detailed in the following:

- check implementation/compliance with the SHE documentation (updating and reviewing, as required);
- conduct regular Inspections;
- check the implementation, content, participation and effectiveness of specific dedicated meetings (see 10.3 sections) verifying compliance with SPCC SHE requirements;
- examine accident reports, perform statistical analyses and publicise the results as necessary;
- prepare a monthly SHE reports, collecting all informations from all SUBCONTRACTORS and CONTRACTORS department, for the SHEM and the SM review (SHE Monthly Report Forms as per Annex1 by the 3rd day of each month, and the SHE Monthly report for PTTLNG 122018-SPCC-C-SH-PR-0037 by the 5th of each month).
- DSHE manager ensure a full set of information for the EIA compliance to mitigation measures for construction implemented into the SHE Monthly report for PTTLNG.

for the Training shall:

- ensuring that all personnel involved with Construction activities, including SUBCONTRACTORS and VENDORS (if any), are adequately instructed of the Project SHE Requirements;
- ensure training of all site personnel (on SHE matters) at any level of the project structure (SPCC Induction and trainings);

This document is the property of SPCC who will safeguard its rights according to the civil and penal provisions of the Law.

- arranged SHE training sessions (and specific training prior to start any work activity).

for the PPE shall:

- ensure compliance with local law or more stringent standards, contract, procedures, relating to the provision and use of PPE.

for the Hazard Management shall:

- ensure that all personnel are aware of the SHE requirements of their activities;
- manage the waste streams, compile and issue of documents and reports required in accordance with the Waste Management Plan and the EIA;
- plan and carry out, when necessary, studies and/or hazard analyses.

The SHEM / DSHE Manager avails himself of the collaboration of the:

- Safety Manager by Law, (CONTRACTOR SHE COORDINATOR)
- Environmental Specialist, and
- Security Coordinator.

for the following duties:

- Assure that all THAI laws, requirements are all implemented and tailor the SHE Management System under THAI law requirements.
- Coordinate all SHE and Security activities giving full support and consultant to the SHEM/DSHEM.
- Stop all work when THAI SHE and/or Security laws are not respected
- Translate from English to Thai version to all SHE & EIA relevant documents for communication before hand to the relevant involved parties (i.e. Work Permit Forms)

OHS&E Trainer shall:

Prepare and organize SHE Induction, develop and implement a training programme covering aspects such as abrasive wheels, enclosed spaces, breathing apparatus, harnesses, driving, etc, in line with Project Risk assessment results.
OHS&E Trainer shall keep the records and tracking system for the training and communicate on monthly base the relevant information for the monthly report to the DSHEM.

OHS&E Trainer ensure that personnel are aware of:

- SPCC and PTTLNG organisation and principal personnel;
- All employee SHE responsibilities under SPCC and PTTLNG rules;
- project SHE Policy and objectives;
- education and training programme;
- Health, Safety and Environmental practices;
- foreman's tool box talks;
- SHE information communication programme;
- SHE incentive programme;
- SHE discipline programme;
- Reporting hazardous conditions;
- other matters as necessary, housekeeping and sanitation procedures;

This document is the property of SPCC who will safeguard its rights according to the civil and penal provisions of the Law.

- Risk assessments.

Duties for other Environemental, Health and Security functions have been reported within the relevant documentation.

6. DOCUMENT UPDATING AND DISTRIBUTION

This plan is a live document. To ensure its accuracy and consistency, this document will be readily updated and maintained whenever the responsibilities of people involved or the specific scope of work will change.

All revisions to this document will be done by CONTRACTOR SHE Manager or DSHEM and approved by CONTRACTOR Project Director for final issue.

The distribution of this document is under the direct responsibility of CONTRACTOR Project Director / Project Manager (PM).

The SHE Plan shall be distributed to:

- CONTRACTOR Project Director (PD)
- Site Manager (SM)
- CONTRACTOR SHE Manager (SHEM);
- CONTRACTOR Deputy SHE Manager (DSHEM);
- PTTLNG/PMC
- SUBCONTRACTORs (during bidding phase, if available and update during the construction phase).
- SUBCONTRACTORS SHE Managers
- SUPPLIER
- VENDORS

7. SHE POLICIES



Construction phase, as well as each phase of the Project, will fully comply with PTTLNG Policy Statements, SPCC SHE Policy Statement.

This policy statement that reflects the commitment of CONTRACTOR's to the protection of the Environment, and the Health and Safety of its personnel and all people that could be affected by its operations, as further detailed in the following sections. The SHE Policy is the basis upon which Project SHE objectives are set.

This document is the property of SPCC who will safeguard its rights according to the civil and penal provisions of the Law.

Through the implementation of our SHE management system, the SPCC management will:

☐ Prevent accidents resulting from our activities.

☐ Assess and manage the risk which may arise from our activities for people, assets or environment.

☐ Preserve our employees' physical integrity and preserve environment.

☐ Meet or exceed the regulatory requirements of the Thai government through strict adherence to all applicable national, provincial and international laws.

☐ Report our performance against SHE objectives and targets to PTTLNG/PMC.

All SHE activities foreseen for the Project have the aim to implement SHE policy statements.
The Project has issued the following:

- SHE Policy
- Alcohol & Drugs Policy

7.1. Drugs & Alcohol Policy

Use of Alcohol and Drugs on the site shall be cause for immediate dismissal and permanent removal from the site.

Testing for drugs and alcohol without cause (at random) or following any undesirable event, accident or near-miss will comply with laws applicable in Thailand.

This document is the property of SPCC who will safeguard its rights according to the civil and penal provisions of the Law.

PTTLNG Nong Fab LNG Receiving Terminal Project

Project SAFETY HEALTH and ENVIRONMENT Policy

Project Direction recognizes the importance to deliver the PROJECT with the highest attention to safety and health of all people in any way interested by the PROJECT and for the environment that is surrounding the project that can be summarize in the motto:

"Safety from Heart "

SPCC Joint Venture is fully committed to achieving the highest standard of SHE performances by creating and maintaining a safe work condition for all personnel associated with PTTLNG Nong Fab LNG Receiving Terminal Project. Respect of Safety, Health and Environmental Laws, rules, regulations and International Standards together with the implementation of the SHE Management system, are the keys to achieve project success, continuously promoting a Project-wide culture for SHE also through specific programs (LIHS, Life Saving Rules), and by ensuring adequate training to all the involved parties. Prevention and Protection of Safety, Health and Environment is also guarantee through the application of SECURITY Plan on the PROJECT.

All of us must be aware of our personal impact on safety, health and environment while performing our work at site as well as on the communities which may be affected by Project's operations, and ensuring the efficient use of energy and natural resources.

SPCC Joint Venture shall select its project partners, Subcontractors and Vendors on the basis of their compliance with highest rules for health, safety and the environment, with a tolerance zero for those individual disrespectful of Laws and regulations and Life Saving Rules.

SPCC Joint Venture is fully committed to provide the resources necessary to implement this policy and carry out a strategy of preventing pollution and potential SHE hazards by performing their Identification, Risk Assessment and implement necessary plans and procedures and check regularly their efficacy in order to improve all aspects of workplace Safety, Health and Environment and the protection of all stakeholders in accordance but not limited to the International Standards OHSAS 18001 and ISO 14001.

All resources belonging to management team shall demonstrate to be a leader by example in the field of Health, Safety and the Environment promoting Health and Safe working practices and Environmental protection performing their own activities. The performance evaluation of each project member shall be also based on the SHE performance achieved by the Team effort.

14December18

[redacted] [redacted]

This document is the property of SPCC who will safeguard its rights according to the civil and penal provisions of the Law.

PTTLNG Nong Fab LNG Receiving Terminal Project

Project Alcohol and Drug Policy

SPCC Joint Venture is fully committed to achieving the highest standard of SHE performances by creating and maintaining a safe work condition for all personnel associated with PTTLNG Nong Fab LNG Receiving Terminal Project.

Management is strongly committed to ensure that personnel employed must not partake at any time, during the performance of the work or be under the influence of any alcoholic liquor, drug or other intoxicating substance, while on duty, other than for bona fide medical reasons.

It is not acceptable to be under the influence of alcohol or drugs at work or consume alcohol or drugs this includes paid and un-paid breaks.

Use of such items (i.e. Alcohol and Drug) on the site shall be cause for immediate dismissal and permanent removal from the site.

To:

- Ensure that the JV SPCC complies with legislation and Owner's requirement;
- Minimize the risks associated with alcohol and drugs in the workplace.

To make an early identification of who may be experiencing alcohol or drug problems specific Alcohol and Drug checks will be performed within the remit of Thailand Law.

[redacted]

This document is the property of SPCC who will safeguard its rights according to the civil and penal provisions of the Law.

8. SHE POLICY DISSEMINATION

Inside the offices and on site several safety boards will be placed and SHE policies posted on. During induction and training SHE policies will be always empathized and content explained to everybody that has to completely adhere to.

Respect and dissemination of all statements is a Construction Management ad SHE Management duty.

9. PROJECT KPIs AND TARGETS

The trailing and leading indicators (KPIs) for Safety & Environment are part of the CONTRACTOR SHE reporting system.

They can also be used for setting measurable target objectives to manage SHE activities or establish safety bonuses for personnel or project.

SHE issues and performance including reporting on progress, reviews, action close out, areas of concern, incidents, mitigation measure implementation and monitoring records required in the EIA report will be part of the monthly SHE report.

Safety stats and KPI shall be also collected for internal use of CONTRACTOR according the forms attached on monthly base.

- **TARGETS FOR TRAILING SAFETY & ENVIRONMENT KPIS**

TRAILING INDICATOR	Project TARGET
Fatality (FTL)	Target = zero
Lost Time Injuries Frequency rate - LTIFR	LTIFR= 0
Total recordable injuries frequency rate (TRIFR)	TRIFR= 0,226 (PTTLNG requirement)
Road Traffic Accidents (RTA) per 1,000,000 Km driven	RTA = as reported
Waste generation	as defines based on the EIA
Energy consumption	
Water consumption	
Spills	Maximum number of spills (> 100 liters) = zero
SHE deviations notified by third parties	Zero.(Examples of deviations: notification by PTTLNG, complaint by neighboring communities, notification or fine by authorities)

According to the PTTLNG requirements all indicators are referring to 200.000 man hours.

This document is the property of SPCC who will safeguard its rights according to the civil and penal provisions of the Law.

- **TARGETS FOR LEADING SAFETY & ENVIRONMENT KPIS**

LEADING INDICATOR	TARGET
SHE Training hours	Comply with the Project SHE training schedule
Management SHE visits	(by Project management based in CONTRACTOR head offices) Project target 2 per year
Site Management Inspections	(by Site management No SHE) Project target > 1 per week [1/w recommended by PTTLNG]
Pre-job meetings	100 % realized by all teams/shifts
Tool Box Talks (TBT) weekly	100 % realized by all supervisors/foremen
Job Safety Environmental Analysis (JSEA)	Actual number is reported JSEA is required before starting any new job or any new job conditions or any hazardous job
SHE meetings	Comply with the project's Program
SHE Inspection	Comply with the Project SHE Inspection schedule
Undesirable events reported	To measure the number of SHOC cards completed To fix a target can be misleading : maximum of events reported (transparency & control) against minimum of undesirable SHE events)
Near Miss (NM)	To measure the number of NM reports completed. To fix a target can be also misleading
Investigation of notified incidents	100% investigated (including near-misses)
Km. Driven	Actual Km. reported for calculation of RTA frequency

Celebration target for LTI free shall follow the steps indicated below:

- 1 Million MH LTI FREE
- 5 Million MH LTI FREE
- 10 Million MH LTI FREE
- 15 Million MH LTI FREE
- End of the Project forecasted 17 Million MH LTI FREE

- **TARGETS FOR MEDICAL KPIS**

Health indicators are detailed in the CONTRACTOR procedure and are also part of the CONTRACTOR SHE reporting.

This document is the property of SPCC who will safeguard its rights according to the civil and penal provisions of the Law.

10. SHE MANAGEMENT SYSTEM

CONTRACTOR is OHSAS 18001:2007 and ISO 14001:2015 certified and CONTRACTOR SHE MS meet the above mentioned Standards.

In accordance with principles stated in the CONTRACTOR SHE Policy, the SHE MS is established to ensure that Health, Safety and Environmental issues are comprehensively addressed at all stages of the Project life cycle, and that all design choices and decisions are justified with respect to their implications for Health, Safety and Environment during the following phases of the Project.

10.1. The SHE Management System in the Project development

The application of the SHE MS to PTTLNG Project is based on four fundamental points:

- Organization;
- Assessment and planning;
- Implementation and operation;
- Controls and corrective actions.

10.1.1. Organization

The SHE organizational structure is composed of experts who combine the SHE skills typical of engineering with those of plant construction and commissioning (SHE Overall Management). These experts are coordinated by the Project SHE Manager which guarantees the proper application of the SHE MS during all the Project phases, and at Site by the SHE Manager.

10.1.2. Assessment and planning

The main activities carried out by the SHE Team in the assessment and planning of the various phases of the Project are:

- the identification of hazards,
- the risk assessment,
- the identification of environmental issues to be kept under control,
- the definition of SHE objectives to be pursued,
- the identification of legislation and SHE requirements to be observed,
- the preparation of SHE deliverables.

These activities also involve specialists from other disciplines and the PD and SM.

10.1.3. Implementation and operation

In order to achieve the SHE objectives defined in the assessment and planning phase all Project staff will be involved in the activities following described in this Plan.

This document is the property of SPCC who will safeguard its rights according to the civil and penal provisions of the Law.

10.1.4. Controls and corrective actions

The proper application of the SHE MS is constantly checked by the Project SHE structure. This is a control which derives from the need to keep to schedule in executing activities and to reduce unforeseen events and risks to people and to the environment.

10.2. SHE Objectives

The main objectives of the CONTRACTOR SHE MS are summarized as follows:

- identification of all potential SHE impacts associated with the Project, and application of prevention, control and mitigation measures to eliminate or minimize harm to people, damage to project or equipment, or adverse environmental damage;
- minimization of the incidents likelihood during all phases of the Project and to guarantee a safe working environment for people, in compliance with the contractual SHE Requirements and Local, National and International Regulations;
- minimizing negative effects on the environment through waste and spill management and the use of carefully thought out and executed design, procurement and construction methods;
- promotion in adopting a positive, proactive, committed health, safety and environmental culture throughout all phases of the Project;
- pursuit of continuous improvement by regularly planning, implementing, auditing, and updating the System (i.e. Plan-Do-Check-Act cycle);
- project commitment, and active and visible leadership in promoting the correct application of the Project SHE MS to ensure that all hazards and environmental impact factors related to the Project are identified, their risks and environmental impact quantified and appropriate control and mitigation measures are taken to manage them;
- Increasing the SHE culture in the workforce;
- Be always prepared and resourced to manage, contain and de-escalate emergency situations;
- Ensuring continuous improvement through periodic Management SHE Reviews.

In particular, during the execution of the Project will be assured the following specific objectives:

- SHE MS:
    - The SHE MS will be implemented in order to assure the preservation of the ISO 14001:2015 and OHSAS 18001:2007 certification.
    - Periodical Audits will be performed in order to verify the compliance with the applicable laws, CONTRACTOR requirements, relevant international standards and the control of the Sub-CONTRACTOR.
    - A specific training program will be developed in order to cover all the training needs of the workforce, ensuring the compliance with the relevant project requirements, laws and regulations, applying where possible the standardized courses of the CONTRACTOR
    - Proper communication between Project staff and the upper levels of CONTRACTOR Group will be ensured in accordance with the relevant applicable standards and procedures.
- Health:

This document is the property of SPCC who will safeguard its rights according to the civil and penal provisions of the Law.

- CONTRACTOR promotes Health campaigns and programs will be actively sustained and implemented by the Project Team.
- All the CONTRACTORSs and its SUBCONTRACTORs personnel involved in the execution of the project will be subjected to a Medical Fitness Examination following the Health Project requirements.

  Detailes reported within the Health Management Procedures and Planning doc n 122018-SPCC-C-SH-PR-0005

- Safety:
  - The Project management will establish and pursues the Project Annual Safety Performance Targets.
  - CONTRACTOR's promoted Safety campaigns and programs will be actively sustained and implemented by the Project Team.
  - Incident Investigations outcomes and Project Safety Performance data will be reported and shared within the CONTRACTOR HO in accordance with the relevant CONTRACTOR standards and procedures
  - All the possible emergency scenarios will be properly assessed in order to minimize the emergency magnitude. Periodical drills will be performed at Site in order to ensure the prompt and efficient response to all the emergency reasonably foreseeable.
- Environment:
  - Project Team is committed to reduce energy consumptions, increase energy efficiency and, whenever possible, to prefer the use of renewable energy during the Project execution.
  - Natural resources saving (especially for water use) will be strongly promoted and encouraged.
  - Environmental impacts including (waste and spills) due to the Projects activities will be properly assessed and managed.
  - The Environmental performance data will be reported and shared within the CONTRACTOR's management respectivelly in accordance with the relevant CONTRACTOR procedures

    Detailes reported within the Environmental Management Plan doc n 122018-SPCC-C-SH-PR-0032.

Further SHE Objectives can be defined at a later stage according with the Project needs.

10.2.1. Objectives Management Review

Project Management will review, at least once per year, the Project SHE MS in order to ensure its continuing suitability, adequacy and effectiveness, giving its feedback to the CONTRACTOR HO.

Annual Objectives and Targets will be reviewed in the following cases:

- When the targets are failed or not reasonably achievable
- In case of project top management changes
- In any case, at least, once per year.

This document is the property of SPCC who will safeguard its rights according to the civil and penal provisions of the Law.

10.3. Leadership and Commitment

CONTRACTOR Project Management will demonstrate strong and visible leadership and commitment concerning Health, Safety and Environment management, and will be directly involved and responsible for the SHE MS implementation.

Project Management will work actively and systematically on SHE issues within the organization, and ensure that all decisions and practices are in line with the principles of the SHE MS.

Such commitment will be transmitted to all the levels from the PD down throughout the organization.

CONTRACTOR commitment will be realized through and witnessed by:

- Positive and proactive SHE attitude by the Project Management and the work force
- Visible management participation in activities as SHE meetings, audits, accident investigations, reviews and hazard identification system
- Leading periodical SHE walk about
- Planning and implementation of SHE action plans, assessment of results and initiation of corrective actions for continuous improvement
- Planning and organizing the work in a safe manner prior to executing the tasks, by conducting Risk Assessments for all the operation to be performed and in particular for non-routine and hazardous activities
- Provision of suitable training, supervision, information and instruction to all concerned personnel
- Regular, active and responsible participation of all personnel in SHE training courses, Job Safety Analysis, Tool-box Meetings, which have to be conducted by suitably qualified SHE personnel
- Providing safety of the personnel, safe site, equipment, personal protective equipment and safe systems of work
- Acceptance and accountability of the responsibility for accidents and incidents in the workplaces
- Performing of accident investigation and review of occurred accidents, and further identification of remedial and preventive actions
- Introduction of systems to encourage all workforce in providing suggestions and proposals for improvements in SHE performance

10.4. Leadership In Health And Safety Program (LiHS)

CONTRACTOR has developed an innovative and highly interactive training program with the aim of creating and enforce a strong Safety and Health Culture within the organization starting from the Management: the Leadership in Health and Safety Program (LiHS).

In order to achieve this cultural change, the main objective of LiHS is to begin the improving process of our managers in fully matured Safety Leaders.

A clearly defined top down strategy enables each level of management to become safety ambassadors, sponsoring the next levels in order to touch every manager within the organization, and in addition delivering critical safety messages down to every employee.

This document is the property of SPCC who will safeguard its rights according to the civil and penal provisions of the Law.

In addition to this, an innovative bottom-up approach was developed, which utilizes the 'personal social influence' of selected employees who actively work to instil the 5 leading behaviours into the organization at local levels.

The implementation of the LiHS program will be evaluated by CONTRACTOR Management for the CONTRACTOR's personnel.

The opportunity to extend the LiHS program to other personnel involved in the Project, if any, will be evaluated according to the PTTLNG requests.

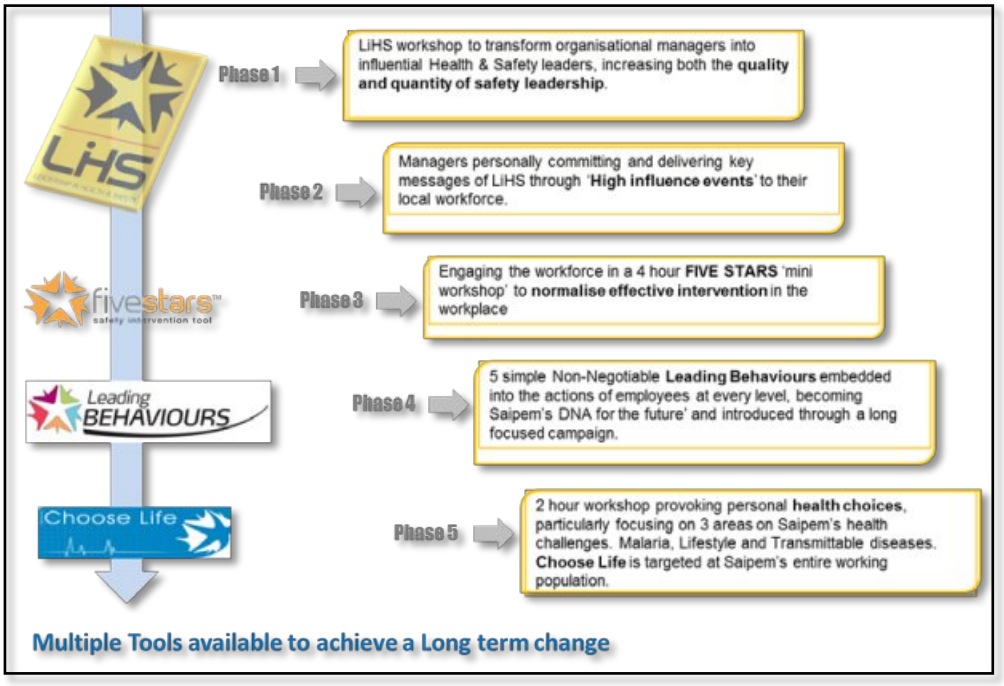

10.5. CONTRACTOR Life Saving Rules Campaign

CONTRACTOR has launched within its organization a new safety campaign, called "Life Saving Rules". These rules are already present within CONTRACTOR's (Saipem) existing SHEMS, programmes, procedures and policies; their purpose however is to give a heightened awareness of the activities which are most likely to result in fatalities.

They are based on the International Association of Oil & Gas Producers Life Saving Rules (Report No. 459 April 2013 (Version 2), who made their material freely available to implement. As the IOGP strongly recommends, the rules have been adapted to reflect CONTRACTOR's communication style, use of multiple languages, and complexity of diverse operations. The fundamentals of each rule and icon remain the same.

This document is the property of SPCC who will safeguard its rights according to the civil and penal provisions of the Law.

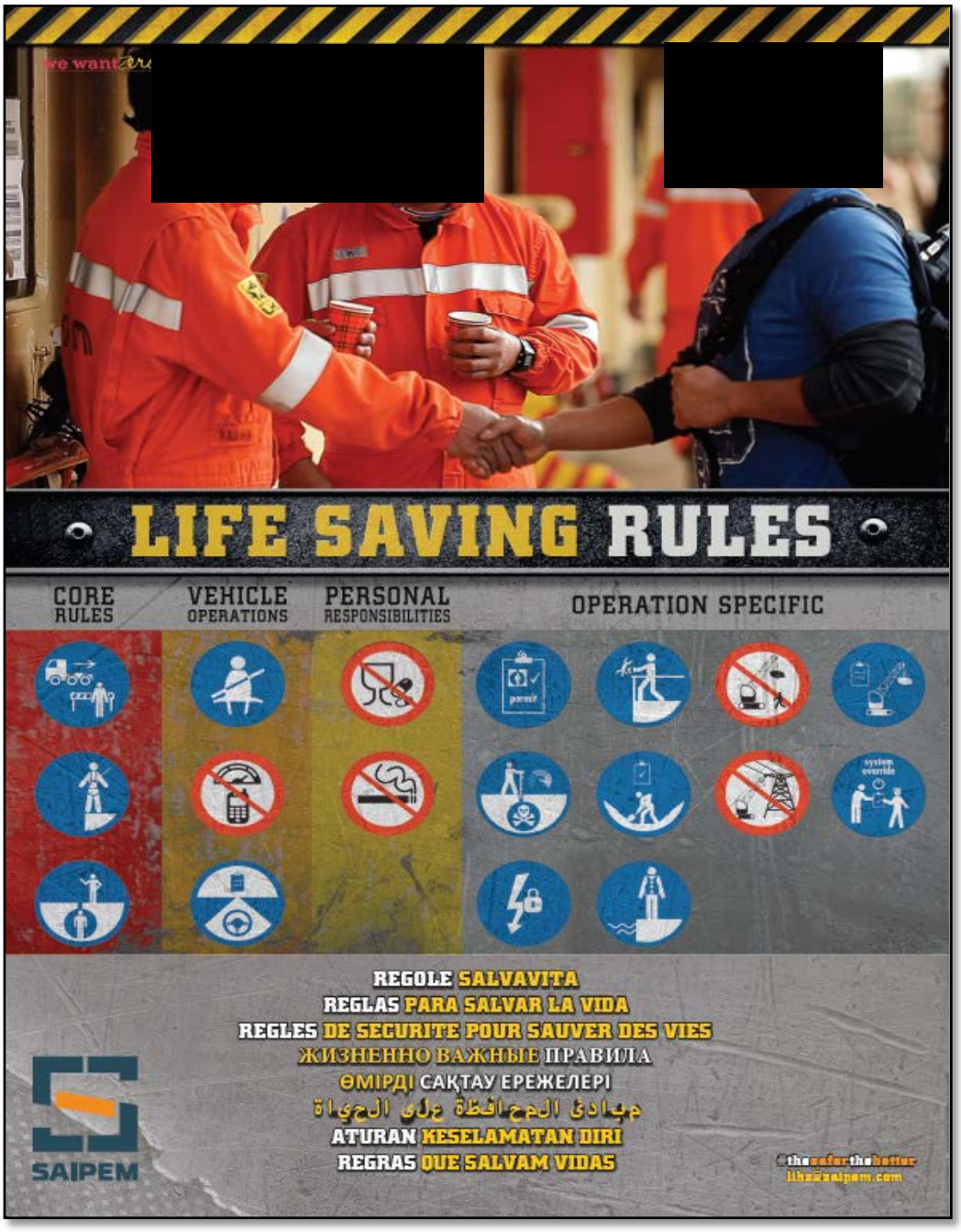

The Campaign will be divided into 3 phases, and the aim is to communicate/cascade each phase to the workforce in an effective way, planning the release appropriate to the local operational contexts, and through meetings, toolbox talks, specific events etc.

1) Campaign Launch.
2) Progressive organisation-wide release of the 3 ‘Core Rules’.
3) Release of the remaining rules as a toolkit.

This document is the property of SPCC who will safeguard its rights according to the civil and penal provisions of the Law.

11. SHE ACTIVITIES

11.1. Activities Overview

The main SHE activities that will be carried out during the Construction phase of the Project will refer to:

- Identification and assessment of SHE risks for the contracted job, covering hazardous equipment, workplace hazards, hazardous substances and harmful agents;
- Choice and implementation of risk mitigation measures;
- Implementation of specific ERP in case of emergency occurrence;
- Issuing and implementation of safe working procedures for performing hazardous jobs, briefing of all personnel involved with the work regarding hazards and know-how of their avoidance;
- Preparation and implementation of project SHE training program to increase the level of knowledge for all the people involved in site activities;
- Performing routine checks of site firefighting and safety equipment to ensure they function correctly; routine checks on personnel working practices, ensuring they wear proper site clothing and PPE;
- Implementation of accident / incident investigation reporting procedure and monitoring that corrective actions to prevent reoccurrence of accidents are implemented;
- Reporting to CONTRACTOR organization and to PTTLNG the status of planning and implementation of activities to ensure safe construction activities;
- Inspecting all machinery, tools and equipment used;
- Perform periodically audits and inspections to ensure the correct SHE management.
- Implementation of Training Matrix;
- Verification of the monthly inspection of equipments and gears completed by CONTRACTOR and SUBCONTRACTORS.

CONTRACTOR developed Safety Construction procedures according to the Contractual requirements and collected them all together into the *"Construction SHE Manual"*, that shall comply with PTTLNG and CONTRACTOR requirements together with relevant industry codes, practices and norms and any mandatory regulation imposed by THAI authorities.

SHE Audits and inspections will be performed by CONTRACTOR during the Construction Phase of the Project, in order to ensure that the site activities shall be executed in accordance with the applicable laws, Safety Codes, SHE requirements, Regulations and good operations practices.

Each SUBCONTRACTOR SHE Manager is required to provide signed copy of the CONTRACTOR's Policy/Manual/Plan and procedures to confirm that he has read, accepts and understood.

It's responsibility of each SUBCONTRACTOR to define which specification may apply to their scope of work and provide justification for not being applicable for the CONTRACTOR's final approval.

SUBCONTRACTOR shall bring to the attention of SHE department any totally or partially misalignment /inconsistency/not applicability of the documents in this plan.

The acceptance of the SUBCONTRACTOR's SHE documentation doesn't relieve the SUBCONTRACTOR to strictly adhere to THAI regulation and applicable Site SHE rules.

This document is the property of SPCC who will safeguard its rights according to the civil and penal provisions of the Law.

11.2. SHE Deliverables

Full list into the Project SHE Plan 122018-SPCC-C-SH-PR-0001

11.2.1. SHE Manual for Construction and relevant Procedures

The SHE Manual defines all safety working procedures together with those stated at section 4 of the present document that CONTRACTOR will apply during the Construction phase of the Project in order to properly face the SHE hazards that characterize the tasks forming the job and to avoid SHE accidents occurrence.

The SHE Manual constitutes a reference document for the SHE hazards identification, and control relevant to the whole Construction, stages.

Additionally, the SHE Manual will state provisions for PPE, Safety signs and Barriers, inspections, audit, critical lifting and planning, etc.

This document will contain Site SHE procedures to be implemented together with the others as per section 4.

All specific SUBCONTRACTOR procedures for site activities shall be subject to SHEM/DSHEM at site for monitoring and approval.

In cases where SUBCONTRACTOR'S work procedures do not meet the required project standards, the SHEM at site will assist in the development of the appropriate procedures and assist the SUBCONTRACTOR in developing an approach to comply with the procedures.

The procedures may be modified and expanded (by the SHEM at site), as required, throughout the duration of the Construction phase.

For all hazardous materials used by the SUBCONTRACTORS, the SHEM at site shall ensure that:

- Inventory of Chemical is at site 1 month in advance of hazardous material arrive at site
- SDS (safety data sheet) is obtained 1 month before delivery to site of any hazardous material;
- there exist appropriate facilities for proper unloading and storage;
- information on the hazards of the materials is properly communicated to the users;
- employees shall be trained in the safe use of the materials, including personal protective equipment and emergency procedures;
- copy of the SDS shall be available to all personnel in the area where the hazardous material is being stored or used,
- a written procedure exists for their use and disposal.

The SHEM at site shall also ensure that an inventory of the SDS is kept and made available on demand and also on site first aid room/clinic and on the place where the substance has to be used.

The following are among those which should be in the inventory:

- Paints, coatings, thinners, solvents and cleaning agents;
- Insulating materials such as fibre glass and ceramics;
- Sandblasting materials;
- Compressed gasses such as oxygen, nitrogen, argon, helium, acetylene;

This document is the property of SPCC who will safeguard its rights according to the civil and penal provisions of the Law.

- Greases, oils, and other lubricants;
- Fuel such as gasoline, diesel, kerosene;
- Epoxy resins / sealant;
- Bulk containers of household products and disinfectants;
- Cement.

11.2.2. SHE Risk Assessment

CONTRACTOR shall provide information and input as required into PTTLNG's Report on Protective Measures for Operational Safety as required by Notification of the Ministry of Industry No: 3 (BE 2542) issued under the Factory Act BE 2535. The information shall be supplied based on the safety reviews, hazard and risk assessment carried out by CONTRACTOR.

CONTRACTOR's management will ensure that every work activity performed under the CONTRACTOR responsibility, by CONTRACTOR and its SUBCONTRACTORs, vendors and suppliers is executed in a safe and controlled manner.

For each activity performed during Construction, Pre-Commissioning and Commissioning phases, a Qualitative/Quantitative Risk Assessment will be prepared.

All tasks will be subject to a written Method Statement, a Risk Assessment (RA) / Job Safety Environmental Analysis (JSEA) carried out by competent persons, and submitted to SHE and Construction representatives for review and approval.

A RA shall be required for each SUBCONTRACTOR activity, and mitigation measures shall be implemented before work commences.

Carry out a RA means to make a preliminary evaluation of risks and the evaluation of residual risks as result of the application of mitigation measures; the methodology deriving from the definition of risk is applied using a Risk Matrix:

- Probability Rate (P): quantification of the probability that a dangerous situation may result in harm to the exposed personnel;
- Severity Rate (S): quantification of the magnitude, namely the severity of the consequences for the exposed personnel that may cause harmful situations to degenerate;
- Risk Rate (R): the product of the probability rate (P) by the severity rate (S).

The complete process will be detailed in *a specific CONTRACTOR document* SHE RISK Assessment and JSEA procedure 122018-SPCC-C-SH-PR-0018

A separate document shall be issued the risk assessment of all activities performed on the project during each phase, specifically for construction into the doc n. 122018-SPCC-C-SH-RPT-0005 SAFETY RISK ASSESSMENT FOR CONSTRUCTION

11.2.3. Job Safety Environmental Analysis

The Job Safety Environmental Analysis (JSEA) is an excellent and efficient technique for identifying unsafe conditions and acts in the working environment.

A JSEA is intended to analyse the individual steps or activities, which create a job or specific work duty, and to detect any specific potential hazard that may be released in the working environment.

Before starting every activity under the CONTRACTOR responsibility, Construction and SHE representatives will be accountable for a Job Safety Analysis (JSEA), bearing in mind:

This document is the property of SPCC who will safeguard its rights according to the civil and penal provisions of the Law.

- The related Safety Manual procedure;
- The risk assessment;
- The available equipment;
- The other interfering activities;
- The number of workers to realize the job;
- The existing environment (including weather conditions) where the work has to be executed.

The resulting JSEA will be recorded and updated if any element should change.

The JSEA is commonly used to identify less obvious or specific potential hazards that may go undetected or being missed during routine management observations or audits or during the general RA analysis.

Moreover it:

- Can be performed relatively quickly for less protracted tasks.
- Identifies actual and potential physical hazards in the work environment, and helps determine how they should be managed.
- Reveals hazardous motions, postures, activities or work practices of individual employees.
- Assists personnel on how to perform operations, by breaking the job task down into individual steps and identifying risk and control measures for each individual step.
- Improves efficiency by identifying incorrect procedures or work instructions.
- Increases employee involvement in the safety process.
- Enhances communication between management and employees regarding safety concerns.
- Contributes to the productivity of a job by eliminating or reducing its injury potential.

The complete JSEA Methodology will be detailed in *a specific CONTRACTOR* procedure

SHE RISK Assessment and JSEA Management doc n 122018-SPCC-C-SH-PR-0018

11.2.4. Emergency Response Plan

The Emergency Response Plan has the aim to approach a site emergency and demonstrate that all the possible hazardous situations are properly identified, managed, reported and dealt with a safe, efficient and effective manner.

The ERP will describe the emergency system that the CONTRACTOR applies to the Project, in order to face the accidents that can occur during Construction phase.

CONTRACTOR initial ERP will be reviewed, if necessary, with PTTLNG to coordinate the mobilization of the following resources into a global ERP:

- the community (firemen, hospitals and doctors, police force, etc.);
- PTTLNG resources.

The ERP will be transmitted to:

- Control Personnel;
- Emergency Services;
- Employees who may be affected;
- PTTLNG/PMC Representative;
- Others likely to be impacted.

This document is the property of SPCC who will safeguard its rights according to the civil and penal provisions of the Law.

and will cover:

- organization, responsibilities, authorities and procedures including the maintenance of internal and external communications;
- systems and procedures for providing personnel refuge, evacuation, rescue, medical treatment and repatriation;
- systems and procedures for preventing, mitigating and monitoring environmental effects of emergency actions;
- procedures for communicating with authorities, relatives, the media and other relevant parties;
- arrangements for training response teams and for testing emergency systems and procedures;

The scenarios will be covered as a minimum by the ERP:

- worksite injuries
- safe escape and evacuation from site during emergencies;
- natural disasters (e.g. earthquakes);
- road traffic accidents;
- fire and explosion;
- missing person.

Deliverable: Emergency Response Plan for Construction 122018-SPCC-C-SH-PR-0031

The SM for the Emergency Response Plan for construction shall:

- ensure that basic site medical facilities (first aid) and medical support are in place before and throughout Construction Works;
  ensure that the Emergency Response Plan is fully implemented and regularly tested in the emergency drills;
- attend and participate in relevant SHE Meetings
- ensure that SPCC line management and supervisors participate, contribute actively
- and exercise leadership in their respective individual and collective project safety meetings;
- ensure that SHE is a regular agenda item at site management meetings;
- conduct unscheduled meetings as necessary at his discretion or on request of the SPCC SHEM/DSHEM or site Safety manager

11.2.5. Environmental Management Plan (EMP)

The Environmental Management Plans, specifies the requirements and methods for the management of the environmental issues concerning the site activities of the PROJECT. The document includes Environmental Mitigation Measures of the EIA.

The document aims to meet applicable legal Environmental Requirements and minimizing the environmental impacts due to site activities, as in the scope of CONTRACTOR SHE MS, SHE Policy, and ISO 14001 Standard “Environmental Management Systems – Requirements with guidance for use”.

This Plan is a living document, and will be reviewed and updated as necessary in order to ensure its adequacy; moreover it will be updated with reference to all construction and commissioning activities.

This document is the property of SPCC who will safeguard its rights according to the civil and penal provisions of the Law.

The main objectives of this Plan are to:

- Minimize the environmental impacts due to site activities;
- Comply with all applicable legal and other environmental requirements;
- Continuously improving site environmental performances.

These objectives are pursued through the following activities:

- Identification of main applicable environmental requirements;
- Description of site SHE roles and responsibilities, with particular respect to environmental activities;
- Identification and assessment of the significant environmental aspects deriving from construction activities;
- Selection of environmental impact minimization and control measures: noise production, atmospheric emissions and dust generation, interference with subsoil/groundwater, waste and waste water generation;
- Adoption of plans/procedures for managing specific environmental aspects;
- Collecting and Reporting environmental data;
- Planning audits to verify the correct implementation by Contractor personnel of the Project Environmental Management System and this plan and detailed control and management plans prescriptions;
- Planning “Legal compliance audits” in order to assess compliance with specific Project environmental legal and other requirements concerning significant environmental aspects.

Preventive measures in order to minimize dust production, emissions to air and noise production will be undertaken.

Therefore, as for the above description, this document cover and describes also all the aspects related to environmental inspection, incident reporting, role and responsibilities (staffing) and training.

The document also contain the specific forms to complete with all the environmental data (e.g Energy and water consumption, waste, etc.).

The document includes the Environmental Mitigation Measures according to EIA, however separated document has been issued as Environmental Monitoring Plan.

Details in the Environmental Management Plan 122018-SPCC-C-SH-PR-0032

11.2.6. Waste Management Plan (WMP)

The Waste Management Plan will provide the guidelines to manage waste and wastewater produced during Project Site activities in order to ensure that each phase (collection, storage, transportation, reuse, recycle and disposal) is appropriately managed with respect to its implications on the environment and in accordance with EIA, International agreements, National Laws and requirements, including contractual ones.

This guideline will be followed by all CONTRACTOR and SUBCONTRACTOR employees throughout the site activities of the Project.

The WMP is of primary importance in ensuring that disposal/facilities options are selected and justified with respect to their implication on the environment.

This document is the property of SPCC who will safeguard its rights according to the civil and penal provisions of the Law.

The scope of the WMP is to:

- Describe how the wastes will be managed (handling, collection, storage, transportation, disposal and record keeping);
- Provide guidance to the Contractor personnel for managing their wastes effectively and within the applicable waste regulation requirements;
- Provide guidance for the collection, handling, and temporary storage of each waste generated during operational activities to protect human health and to minimize the impact on the environment;
- Control the amount of waste generated following good operating practices and respecting waste reduction principles;
- Give guidance for waste reduction according to the hierarchical application of the practices of reuse, recycling, recovery, treatment and final disposal in approved disposal sites.

The WMP is a living document, which shall be updated and reviewed as necessary on site according to actual site conditions and actual waste streams being generated.

Reference : 122018-SPCC-C-SH-PR-0023 Project WASTE Management Plan

This document is the property of SPCC who will safeguard its rights according to the civil and penal provisions of the Law.

11.2.7. Spill Contingency Plan

During the course of site activities, every effort shall be made to ensure that all activities are conducted so to avoid the risk of spills or, if an incident were to occur, to implement measures and actions to prevent its escalation.

The Spill Plan has been prepared and it shall implemented by CONTRACTOR to ensure the management and the control of accidental discharges or spills during the site activities.

This Plan identifies impacts and related mitigation measures to be considered during construction and commissioning activities.

Based on the EIA requirements if any and the identification of the main situations in which a pollutant spill might occur, the plan describes strategies for spill prevention and response.

This Plan details the overall response coordination to spills of hazardous substances associated with site activities in order to organize the control, alert and intervention systems which shall be in function, so as to avoid and, in case, reduce any potential pollution.

Therefore, the basic scope of this Plan is:

- To identify the relevant types of spills and the scenarios which could be possibly lead to pollution (air emissions, noise and vibration, water pollution and liquid waste disposal, solid waste management, accidental spills/discharges of oils/fuels, etc.);
- To identify the prevention strategies (measures) and the response actions adopted during and immediately after the release of pollutants to control the event;
- To describe the organization that shall deal with the problem, both during the prevention and emergency intervention phases (including absorbent pads, containment and clean up equipment to be held and its location);
- To establish the procedures to be adopted for alerting those bodies in charge of emergency management, both within the construction site structures and at higher levels (concerned Government Agencies, etc…), and other response plans;
- To identify the material temporary storage areas (contention walls, waterproofing of soil,..).

CONTRACTOR has overall responsibility for the Spill Prevention on site during site activities.

All employees shall be aware of, and informed about the provisions of the Plan.

This guideline will be followed by all CONTRACTOR and SUBCONTRACTOR employees throughout the construction activities of the Project.

Reference 122018-SPCC-C-SH-PR-0025 Project Spill Contingency Plan

This document is the property of SPCC who will safeguard its rights according to the civil and penal provisions of the Law.

11.2.8. Health Plan

CONTRACTOR has developed a comprehensive Health Management System based on the logic of prevention, and putting a focus on the employees' health protection. CONTRACTOR will apply this Health Management on the Project, and will implement all its health related procedures aiming to safeguard employees' health. The system will be based on CONTRACTOR procedures, PTTLNG requirements for the Project and the applicable regulatory legislation. CONTRACTOR will develop project specific Health Plan that will serve as main tool for health management on the Project.

All works undertaken by Contractor will be carried out in accordance with the guidelines in the overall PTTLNG and CONTRACTOR SHE policies and related SHE objectives. CONTRACTOR will comply with PTTLNG Health related requirements and its Corporate standards for development of medical facilities on the Project.

Described below are the main aspects that CONTRACTOR will take into consideration in developing health management system and health related documents:

- Development of Health Programs;
- Health Risk Assessment;
- Health Plan (Minimum Health Standards for the Project);
- Fitness to work;
- First Aid and medical emergency response;
- Training program for medical and paramedical personnel;
- Hygiene Surveillance.

122018-SPCC-C-SH-PR-0005 Health Management Procedures and Planning

11.2.9. Health Risk Assessment (HRA)

CONTRACTOR has developed Health Risk Assessment procedure that is to be implemented on the Project during the construction and commissioning phases. The procedure describes the process of identification, evaluation and control of potential health hazards and health risks intending to protect and consequently safeguard the employees' health. It is created for helping both the assessor and the line management, who are ultimately responsible for ensuring that the health risk assessment is undertaken. It is also aimed to help the occupational doctors who are conducting employees' fitness medical examinations to understand the health hazards and risks to which they are exposed on each specific worksite. The whole HRA process includes several steps, which include the following:

- To identify the health hazards, hazardous activities, and the exposed personnel
- To assess the health risks and set priorities
- To establish Control Measures
- To establish Recovery Measures
- To formulate and monitor Remedial Action Plans (RAP) -To record the HRA
- To review the HRA

The risk associated with a particular activity is judged by estimating the probability and consequence in relative terms, 'low,' 'medium' or 'high,' and combining the two using previously agreed rules. This approach to the expression of risk is adequate for many types of evaluation, allowing for a structured approach to be adopted in situations where more precise numerical methods would be inappropriate.

This document is the property of SPCC who will safeguard its rights according to the civil and penal provisions of the Law.

The health risk matrix is the tool in ranking health risks. A ranking is obtained by assigning each identified health hazard within the activity a severity and likelihood, based on their potential to cause ill health and the history of previous exposure. Entering different risks on the matrix enables priorities for healthcare management to be set and mitigation measures planned. A comparison between the required controls and current controls will enable the identification of any gaps.

CONTRACTOR will conduct project specific Health Risk Assessment which will provide guidelines for identification, evaluation and control of potential health hazards and health risks intending to protect and consequently safeguard the employees' health. This assessment must be carried out for all stages of the Project starting with the survey activities and will be amended if there will be any changes to existing activities. Based on the hazard identification CONTRACTOR will implement certain controls measure (develop customized programs) in order to minimize the adverse effects of all identified health hazards. As heat stress, dehydration and high noise levels are common health related climatic hazards we have established programs aiming to control the exposure and the effects.

Details into the 122018-SPCC-C-SH-PR-0005 Health Management Procedures and Planning

11.2.10. Medical Emergency Response Plan (MERP)

Medical emergency is a situation in which due to illness or an accident there is the danger of losing a limb, an organ or life. Medical emergencies require timely clinical and surgical intervention capabilities. Therefore, at their first indication, pre-defined procedure shall be activated, in order to immediately involve the first aiders, medical personnel, medical facilities and the Project Management. Immediate intervention is essential, because actions performed in the first minutes of emergency determine the final outcome.

In order to face possible emergencies on the Project, CONTRACTOR will prepare specific evacuation plan for medical emergencies. The plan shall consider the specific needs for the work activities that will be performed.

The elaboration of the plan will be preceded by a survey of the geographic area where the Project will take place. The scope of the survey will be to evaluate the environmental conditions of the site where working activities will take place and the main local medical structures that may be utilized in case of emergency evacuation.

The main chapters to be developed for the MERP will be developed in the following order:

- Definition;
- Scope;
- Responsibilities;
- Lines of communication;
- Medical Evacuation actions:
- Primary Evacuation;
- Secondary Evacuation;
- Repatriation;
- Personnel in charge and their actions.

Moreover, the plan will contain:

- Telephone numbers to contact
- Medical Emergency Transportation chart;

This document is the property of SPCC who will safeguard its rights according to the civil and penal provisions of the Law.

- Medical Emergency Communication flow chart;

Details into the 122018-SPCC-C-SH-PR-0005 Health Management Procedures and Planning

11.2.11. SHE Training and Information Program

SHE training requirements will be identified as the gap between what an individual needs to know, in order to ensure the assigned tasks are performed safely and healthy, and what he actually knows (due to training / qualifications / previous experience).

To provide information, instructions and training, CONTRACTOR will put in place a specific SHE Training Program for workers, on the basis of minimum SHE training needs, with the scope of familiarizing personnel with the rules to enforce in order to prevent injuries/accidents occurrence and allow staff work competently, safely and healthy in the tasks allocated, to increase efficiency and employee job satisfaction.

The CONTRACTOR SHE Team has the responsibility to organize and plan the SHE induction course for all workers and specific training for supervisors, SHE officers, emergency team and critical works or activities.

The CONTRACTOR Training Program is composed of not limited to:

- *Site SHE Induction for every employee entering the site;*
- *General SHE Orientation for every employee working on the project;*
- Training course for workers, supervisors and SHE personnel, as per training matrix
- Emergency response and rescue drills;
- Environmental training;
- Training refreshing courses for workers and supervisors.
- Tool-Box talks;
- Daily Job Specific SHE Talks;
- Others as deemed necessary.

General awareness of health, safety and environmental issues will be introduced during the General SHE Orientation and Training for all project personnel, with particular attention to items including, but not limited, to: Permit to Work, firefighting, safety signs, housekeeping, hand tools and power tools, health diseases, scaffolding, manual handling, confined spaces, working at height, use of PPE's and escape; SHE Policy statements and individuals' SHE responsibilities will be included as a fundamental requirement in orientation training.

Wider description within the SHE Training Procedure 122018-SPCC-C-SH-PR-0003

CONTRACTOR and SUBCONTRACTORS are responsible for deliver all necessary training, to each own employees, at their own cost.

SUBCONTRACTORs is required to continually reinforce the SHE message to their employees on general Site rules and train them in the SHE Requirements of their particular job.

If relevant with the performed activities, CONTRACTOR and SUBCONTRACTORs will inform their employees on:

- Risks identification, assessment & management (Job Safety Analysis, work permit, environment awareness etc.);
- Personnel fitness (periodical medical check-up and/or vaccinations etc.)
- General operation safety (stepping-handling-lifting, personal protective equipment, working at

This document is the property of SPCC who will safeguard its rights according to the civil and penal provisions of the Law.

height);
- Logistic safety (lifting gear, crane, forklift, container, motor vehicle transportation, personnel lifting);
- Mechanical safety (welding, cutting, sand blasting, painting);
- Pressure safety (compressed air, high-pressure circuits, pressure vessels, pressurized operations);
- Electricity safety (earth, lock out-tag out, classified zones);
- Safe handling and disposal of Hazardous material (fuels, acetylene, oxygen, radioactive materials, reactants etc.);
- Pollution control and environmental protection;
- Selection, use and care of all types of personal protective equipment;
- Life-saving and escape techniques (first aid, firefighting, emergency response/preparedness);
- Work at Height;
- Basic Safety Work practices for working on the sea
- Basic firefighting training for all workers;
- Chemical and Hazardous release;

Subcontractors shall also:

Inform their employees of the safe work methods to be adopted in their particular work including the use of standard PPE and additional PPE in line with Risk Assessment results;

Inform their employees of any special SHE rules for working near operating plant.

Inform their managers, supervisors and personnel of the “emergency procedures” so that they may provide the leadership and control required.

These training sessions shall be documented and sent to the Contractor SHE Manager/DSHEM. The SHEM/DSHEM will monitor subcontractors’ training activities to ensure that satisfactory standards are maintained.

Presentation and material to be used during the training, whenever possible should be in line with Delphi system presentations.

11.2.12. As-Built Report

CONTRACTOR shall prepare a Safety, Health and Environmental (SHE) As-Built Report and submit to PTTLNG/PMC for review and approval soon after the Construction Phase and prior to commissioning the overall facilities.

The SHE As-Built Report will include, as a minimum: a description of PROJECT environmental setting, SHE performance, statistics and KPI monitoring, SHE issues, incidents and aspects of construction by Phase, selected photographs (pre-construction, construction, and post-construction) showing activity, and any permits, approvals and documentation issued during the construction phases.

- **Deliverable:** SHE AS BUILT REPORT doc n. 122018-SPCC-C-SH-RPT-0006

This document is the property of SPCC who will safeguard its rights according to the civil and penal provisions of the Law.

11.3. SHE Meetings

The following SHE Meetings will be performed startig by Construction phase until the end of the Project.

- SHE Committee Meetings
- EIA Committee Meeting
- Weekly SHE Meetings;
- Weekly Workforce Tool Box Talks;
- Daily Job Specific SHE Talks;

11.3.1. SHE Committee Meeting

The Site SHE Committee, comprising CONTRACTOR, PTTLNG and Main SUBCONTRACTORs, will be established to jointly plan, control and monitor the SHE at the site.

The committee will be led by the CONTRACTOR Project Management.

The committee includes the following members at site:

- PTTLNG Representatives
- Project / Site Management
- SHE Manager
- Main SUBCONTRACTORs' Site Managers and SHE Manager

The major functions of the committee are as follows:

- Review the SHE Activities Planned & Implemented for effectiveness.
- Establish detailed, common Health, Safety, Security and Environmental activity targets and actions necessary to achieve those targets.
- Plan and conduct site SHE events and activities for the motivation and awareness of all employees.
- Review SHE performance and statistics of all participants. Evaluate the causes and consequences of poor performance. Make public the results to all personnel.
- Disseminate information on all Site incidents involving Health, Safety and Environment, and near misses, including any root cause analysis performed, actions taken, and lessons learned (i.e. incident reporting).
- Study necessary measures for improvement.
- Identify hazardous activities and co-ordinate necessary measures among the parties involved in the work.
- Identify items to be monitored
- Conduct safety patrols to audit and inspect all areas.
- Review and issue the results of audits and inspections and discuss necessary measures for improvement.
- Discuss safety orientation and training.

This document is the property of SPCC who will safeguard its rights according to the civil and penal provisions of the Law.

- At least once per year, review the adequacy of the Project SHE objectives and target and the suitability and effectiveness of the SHE MS.

The Safety Committee will generally meet monthly or more frequently if needed with, as reference, the following standard agenda:

- Review of previous minutes of meetings;
- Review of results of joint inspections and actions taken;
- High risk activities;
- Current activities and problems;
- Accident review and corrective actions taken;
- Future activities.

For compliance to THAI Law and the EIA:

- SPCC shall act to comply with the Thai law for the SHE Committee in the CHAPTER-2, CLAUSE 23 of the Ministerial Regulation on the prescribing of standard for Administration and Management of Occupational Safety, Health and Environment B.E. 2549.
  Minute of SHE Committee Monthly Meeting (MoM) shall be submitted together with the Safety professional report to the Labour Dept on every quarterly.

  EIA monthly Committee meeting shall take place as specified into the approved EIA, it consist of representative from Communities, Government agencies, it's organized by PTTLNG, however the Chairman will be appointed from EIA Committee the and supported for the organization by CONTRACTOR and EIA's SUBCONTRACTOR.

11.3.2. Weekly SHE Meeting

During this meeting, CONTRACTOR and SUBCONTRACTOR SHE depts. will plan and monitor the progress of the SHE activities implemented at site.

The presence of the site management could be requested depending the activities to be discussed.

The meeting will be commonly conducted once a week and minutes of the meetings distributed to the attendees, and CONTRACTOR and SUBCONTRACTOR site management.

Every SUBCONTRACTOR establishes a weekly Safety report to be delivered during the SHE weekly meetings, such report contains at minimum the following past week information:

- Worked hours
- Number of Lost Time Injuries - LTI
- Number of Restricted Work Cases - RWC
- Number of Medical Treatment Cases - MTC
- Number of First Aid Cases - FAC
- Number of Near Misses - NM

This document is the property of SPCC who will safeguard its rights according to the civil and penal provisions of the Law.

- Number of SHE inspections, audits
- Number of Safety Hazards & Observations Cards (SHOC)
- Number of SHE induction performed
- Number of Tool Box Meetings
- All information about significant events which occurred during the week.

The weekly Safety reports will be consolidated every month into the monthly Safety report, which will be communicated according to a distribution list established for the project.

Subcontractors are required to submit to DSHE Manager the safety statistics as per ANNEX 1 by 1st day of each month and provide update on weekly base.

In the weekly SHE meeting it will be also updated the status of follow-up actions and will be provide co-operation and all requested information to assist in the investigation and preventive action of any accident or incident.

All statistical data continuously captured along the project are monitored and analysed by the various SHE committees and compared to the targets. These reviews can lead to preventive or corrective actions in order to improve adequacy or efficiency of the SHE organization, system and effective prevention.

11.3.3. Weekly Workforce Tool Box Talks (TBT)

The weekly Workforce Tool Box Talk meeting will be addressed to the whole workforce with the aim to discuss general safety matters potentially affecting the whole work group.

TBT should not exceed 15 minutes, and will be held at the beginning of the week prior to dispersing the workforce into smaller crews to commence work.

CONTRACTOR and Sub-CONTRACTORs Construction Superintendents/Supervisors/Foremen shall attend the Tool-Box Talk.

11.3.4. Daily Job Specific SHE Tool Box Talks

A pre-job specific meeting is the final review stage led by the foremen (if any, supported by SHE personnel) prior to the actual start of each crews daily work activity.

This meeting is held at the work face, and provides a good opportunity to make a last minute review of the safety procedures for the work to be performed.

The meeting will be conducted at least daily, and in any case, before each shift begin.

Based on the JSEA analysis previously performed, High-risk work phases and potential hazards can be highlighted and discussed to make sure everyone has a clear understanding of the precautions required and the role each person plays in performing the task safely.

Other personnel (middle management or supervision personnel) could attend the meeting, if required.

A written record will be maintained summarizing the main points of discussion.

This document is the property of SPCC who will safeguard its rights according to the civil and penal provisions of the Law.

11.3.5. PROJECT MEETING RECAP TABLE

KOM With SUBCONTRACTORs	Prior to commencement of the works by the SUBCONTRACTOR, a kick-off meeting is carried out between CONTRACTOR, Partner and each of the SUBCONTRACTORs. Team members are Construction Project Manager, Construction Manager and SHE Management of each party and other Management representatives. One of the objectives of the kick-off meeting is to present : • Safety expectations and the specific SHE requirements of the Project • Site safety rules (including discipline) • Organizational requirements (meetings, audits/inspections, notifications, etc.)
Quarterly upon Site opening PMT Meeting	PTTLNG, CONTRACTOR and SUBCONTRACTOR Project Managers conduct a Site visit and then meet to discuss the main following issues: • Communicate to personnel stimulating but reachable objectives • Promote SHE culture and behavior • Create and evaluate the efficiency of the SHE organization in place • Review the global efficiency and the SUBCONTRACTOR's performances and encourage proactive indicator development • Share feedback and lessons learned sharing amongst the different parts of the Project.
Site SHE Monthly Meeting	**Management Committee with PTTLNG and SUBCONTRACTORs**: CONTRACTOR Site SHE Manager sets one meeting per month with SHE representatives. These site-based SHE meetings shall be utilized to: • Review and discuss SHE performance and accomplishments for the previous period and activities planned for the upcoming period. • Provide a forum for PTTLNG feedback regarding the performance and expectations of CONTRACTOR SHE performance. • At every meeting, SUBCONTRACTORs' management representatives at the work location shall be invited and shall present their SHE performance and accomplishments for the previous period and activities planned for the upcoming period.
Weekly Site SHE Meeting	CONTRACTOR (Site Manager, Construction Manager, SHE Mgr.), SUBCONTRACTORs (local Manager, senior SHE supervisors) and PTTLNG (Construction Manager, SHE Manager) are discussing the following items: • SHE program • Two weeks activities look ahead prior to their commencement • The good understanding of SHE principles by the entire workforce

This document is the property of SPCC who will safeguard its rights according to the civil and penal provisions of the Law.

	• The progress of the SHE culture and feedback from the personnel • Current SHE issues and events • Potential hazards, Near Misses, Incidents and related actions to be taken
Tool Box Meetings or Tool Box Talks (TBT) (1)	**1) Weekly TBTs** : work site conducts weekly Tool Box Meetings (often referred as Tool Box Talks) with employees and their immediate supervisor/foreman to discuss the following issues: • Review of actions items from the previous meeting • Incidents and near misses occurred during the period; remedial action taken • Problems employees may be experiencing in execution of a given task • New activities planned for the coming week • Review of any JSEA applicable to any task performed on regular basis • Supervisors and foremen have the opportunity through this meeting to issue recognition awards to meriting employees • Specific prevention topic, for instance: Manual handling, lifting, electricity, Work at Height.
	2) Pre-Job Meeting :The supervisor conducts the Pre-Job Meeting with his crew prior to starting the day or shift activity and uses the following broad format : Review previous day's safety effort and outcome by asking questions: • "How did we do yesterday?", "were there any incidents?" • "Was the correct equipment available to allow the work to proceed safely?" • "Did the equipment operate correctly?" • "Did the work progress as planned?" • "What brought about any changes to the plan?" • Briefly overview today's tasks, focusing on what safety hazards may be faced. • Discuss in detail, the foreseen hazards and the planned control measures for these hazards – refer to Pre-job checklist and get employee input and involvement. • Finish the meeting with a positive and encouraging comment. Employees are encouraged to make comments and suggestions. • Prior to starting a new job, simultaneous operations, or hazardous operations , or all non–routine , or any work requiring a PTW a pre-job meeting is conducted with all personnel present involved in the operations.

This document is the property of SPCC who will safeguard its rights according to the civil and penal provisions of the Law.

11.3.6. Other Meetings

If necessary, under CONTRACTOR evaluation, other Meeting could be held in order to assure the correct disclosure of all the SHE aspect or issue and the proper coordination of the activities.

11.3.7. PTW Coordination Meeting.

According to the provisions of the PTW System procedure, as described in the specific SHE Construction Manual, a relevant PTW Coordination Meeting will be held.

11.4. Permit To Work System

In the areas directly impacted by *Construction, Pre-Commissioning and Commissioning* activities, CONTRACTOR will use *his own PTW system.*

The CONTRACTORs' Permit to Work System is designed to ensure that a safe environment is achieved by providing management control over the various work activities which may be potentially hazardous.

CONTRACTOR Permit to Work procedure will be issued by CONTRACTOR prior to work inside the Construction fenced areas.

More details will be given in the 122018-SPCC-C-SH-PMT-0012 Work Permit Program

Important note

The above indicated doc n. 122018-SPCC-C-SH-PMT-0012 Work Permit Program shall be valid until the introduction of hydrocarbon.

CONTRACTOR shall take special precautions as work changes from construction through to PERFORMANCE ACCEPTANCE and take account of the additional risks posed by hydrocarbons being introduced into TERMINAL. This shall include enhanced site induction SHE meetings, "permit to work" system, control of personnel, segregation of areas, and emergency response. CONTRACTOR shall update all relevant procedures and work practices and carry out SHE reviews to reflect the change in working stage. This shall include the stages following construction and pre-commissioning and commissioning.

One (1) month before the date that hydrocarbon is introduced, CONTRACTOR shall submit its work permit system to PTTLNG/PMC for review and approval.

In all cases, conditions stipulated in the permit must be strictly adhered to. Permits to Work can be withdrawn anytime if it is so proved that conditions stipulated are not adhered to. CONTRACTOR shall ensure a sufficient supply of safety equipment as required by Permit to Work. In any case, where work conditions deviate from those specified or intended, or when the danger signal or fire siren sounds or a clearly unsafe condition exists, e.g. a distinct smell of gas leak, etc., all WORK

This document is the property of SPCC who will safeguard its rights according to the civil and penal provisions of the Law.

must be stopped until safe conditions are again assured and permits re-issued. In these instances, CONTRACTOR may be required to evacuate its personnel and equipment.

More details will be given in the 122018-SPCC-C-SH-PMT-0002 Permit to Work Program for Commissioning and SU.

This document is the property of SPCC who will safeguard its rights according to the civil and penal provisions of the Law.

11.5. SHE Initiatives And Communication Means

11.5.1. SHE Alerts/Bulletins

In order to share SHE awareness and information with the entire Site Team, SHE Alerts/Bulletins will be occasionally spread out, also by mean of mailing list, on topics related to the Project (e.g. Accidents and Near Miss, new SHE procedures issued, etc.) or related to other Sites/Projects.

11.5.2. Notice Board

SHE Notice Board made available at Site in order to assure proper communication and awareness for those people that don't have access to the mail service.

The Notice Board will contain information regarding SHE Policy, Emergency Numbers, Training Program, SHE Services, SHE Alerts, etc.

11.5.3. SHE Incentive / Discipline Scheme

CONTRACTOR will establish both a disciplinary and safety incentives program to curb unsafe or hazardous acts and behaviors and reward safe and team oriented PROJECT personnel. Further details within SHE procedure doc. N. 122018-SPCC-C-SH-PR-0002, moreover it's established and communicated to the PROJECT personnel during induction and when possible to the SUBCONTRACTORs at Kick-Off Meeting.

SHE incentives schemes or challenges are implemented to motivate all workforce including SUBCONTRACTORs to work safely and in an environmentally friendly manner, and to raise the SHE awareness of the workforce.
Personnel receive awards based on their personal leadership on safety or on best Safety Hazard Observation Cards issued.

In addition, incentive schemes are developed to encourage the SHE awareness of the workforce and foster open incident and near-misses reporting. This Incentive scheme, along with a transparent and fair disciplinary procedure, improves the SHE culture of the workforce.

The incentive program can include the implementation of a suggestion system to allow personnel to offer a safety suggestion, identify an issue or concern, or recognize a co-worker. The suggestion forms are turned to the site SHE Manager for review, prioritization, and capture. Action items resulting from forms are logged, tracked to resolution, and communicated back to

11.5.4. PROJECT PENALTY REQUIREMENTS

The Project operates under a "Just Culture" which places individual accountability on employee's actions by defining the lifesaving safety rules and general project safety culture which must be respected by all.

As examples, the following behaviors will be cause for disciplinary/penalty action:

- Violation to the Life Saving Rules

This document is the property of SPCC who will safeguard its rights according to the civil and penal provisions of the Law.

- Performing work under the influence of drugs or alcohol and/or possession of alcohol and drugs.
- Act of violence against people or willful damage to equipment/property.
- Violation of the Safety road transportation Law and Code
- Violation of speed limit at site
- Disregard towards the safety of PTTLNG or fellow workers.
- Significant economic harm to the Project.
- Failure to report incidents or risk exposures.
- Smoking in a non-smoking area.
- Violation to SHE rules.
- Horseplay or practical jokes.
- Failure to wear the correct PPE, improper use of safety equipment.
- Failure to comply with PTW, safety procedures/instructions, qualifications.
- Gambling, hunting, fishing.
- Other unacceptable acts or behaviors may be prohibited to reflect cultural values of local communities and Thai society in general.

11.5.5. SAFETY INCENTIVES PROGRAMS

SHE incentives schemes or challenges are implemented to motivate all workforce including SUBCONTRACTORs to work safely and in an environmentally friendly manner, and to raise the SHE awareness of the workforce.

Personnel receive awards based on their personal leadership on safety or on best Safety Hazard Observation Cards issued.

In addition, incentive schemes are developed to encourage the SHE awareness of the workforce and foster open incident and near-misses reporting. This Incentive scheme, along with a transparent and fair disciplinary procedure, improves the SHE culture of the workforce.

The incentive program can include the implementation of a suggestion system to allow personnel to offer a safety suggestion, identify an issue or concern, or recognize a co-worker. The suggestion forms are turned to the site SHE Manager for review, prioritization, and capture. Action items resulting from forms are logged, tracked to resolution, and communicated back to the workforce.

PTTLNG/PMC may elect to participate in such program.

Recognition programs provide a structured means to periodically reward (typically on 3 monthly base) and recognize those personnel who have contributed in making the worksite safer.

Working safely is seen as a condition of employment, therefore awards will not be directly linked to the expected safety behavior.

All personnel are encouraged to actively take part in the schemes.

The Safety Awards distributions are organized weekly or monthly and are based on merit, active participation, and the achievement of pro-active safety performance targets; such as:

This document is the property of SPCC who will safeguard its rights according to the civil and penal provisions of the Law.

- Near Miss/ Safety Observation Unsafe Act/ Condition Reporting
- Safety Initiatives/ Suggestions
- Displaying safety consideration to fellow workers

The rules and criteria defining this scheme are described in the “Project Safety Award Procedure” to be issued after contact award.

Project works closely with CONTRACTOR (and PTTLNG if applicable) to choose the most appropriate safety awards.

The awards are presented in presence of the PTTLNG/PMC and CONTRACTOR Site Representatives.

Please refer to the SHE Procedures Doc 122018-SPCC-C-SH-PR-0002

This document is the property of SPCC who will safeguard its rights according to the civil and penal provisions of the Law.

11.1. SHE Inspections and Audits

11.1.1. General

Scope of this activity is to verify, during the whole PROJECT life-cycle, the correct implementation of the SHE Management System and to evaluate the overall PROJECT SHE performance, for which the PROJECT Director (PD), Site Manager (SM) and SHE Manger (SHEM) are responsible.
The SHEM will assist the auditors in their activities and help manage possible recommendations in order to properly address them.
Audit results will be documented in dedicated Audit reports and shall include good points, corrective action requests and recommendations, and shall be reported to CONTRACTOR Management in a timely manner.
Corrective actions shall be implemented and their effectiveness verified.
During the audit, the CONTRACTOR monitors the compliance of the PROJECT activities, carried out by CONTRACTOR itself, by SUBCONTRACTORs and/or Vendors, with: Weekly Management Safety Walks.
At least once a week, a site inspection tour will be conducted by the CONTRACTOR and SUBCONTRACTOR Site Management, SHE and Construction representatives, in order to identify and ensure the accomplishment of the necessary organizational measures necessary to solve any SHE issue that has not been solved by the lower supervision levels.
At the end of the inspection a briefing will be conducted among the participants in order to agree an action plan and identify the necessary resources in order to solve the found issues.

11.1.2. SHE Inspections

The site SHE staff is entitled to perform SHE tours on a regular basis, to confirm compliance with safe methods of work. In these checks the SHE can also use checklists based on the risk assessment of each job.

The frequency will be evaluated and established by SHEM depending on the following factors:

- Size of the inspected area.
- Number of people working.
- Kind of activities carried out in the site.
- Skill and experience of the operatives.
- Frequency of accidents/incidents/near misses.

Anyway at least once a week, a site inspection tour (Safety Patrolling) will be conducted by the PTTLNG/PMC, CONTRACTOR and SUBCONTRACTOR Site Management, SHE and Construction representatives, in order to identify and ensure the accomplishment of the necessary organizational measures necessary to solve any SHE issue that has not been solved by the lower supervision levels.

At the end of the inspection a briefing will be conducted among the participants in order to agree an action plan and identify the necessary resources in order to solve the found issues, remedial actions to remove any dangers, and make working places safer, will be put in place by the relevant department/SUBCONTRACTOR..

This document is the property of SPCC who will safeguard its rights according to the civil and penal provisions of the Law.

Moreover the inspection is also an opportunity to share the actions taken and improvement achieved.

For the piece of Equipment inspection a specific register for each piece of equipment shall be used and the inspection must be provide by competent and trained Inspector once a month, after the inspection the inspector shall also put the sticker for the colour coding system.

Type # Frequency	Visit / Inspection Scope	Visit / Inspection team members
Management SHE Visits **# Yearly (minimum)**	Visit of any zone and observation of housekeeping status, visible equipment state, safety rules compliance for equipment and persons, work permit and environmental compliance. These visits give an occasion to communicate with work teams to show commitment and to check SHE awareness.	Visit conducted by the Line or Project /Site/ Vessel Mgr. + person responsible for the area (constr. Mgr., CONTRACTOR and SUBCONTRACTORs supervisors) + SHE rep.

The Management SHE visits are generally scheduled at short notice according to the travels of the Managers for the business on the site.

Type # Frequency	Visit / Inspection Scope	Visit / Inspection team members
Weekly Site Management Inspections (or safety patrolling or safety tours) (or walkthroughs) # Weekly (minimum)	Visit of work areas; interviews of supervisors and employees to assess the efficiency of communication; checking of a sampling of inspection and incident investigation reports; PPE compliance, etc. Recommended frequency = weekly	At least a PTTLNG/PMC member + area or discipline Mgr. + site SHE management. Occasionally members of the PMT when they are coming on the site.
Medical & Hygiene Inspections # Monthly	Inspection of Hygiene in social premises, catering facilities, accommodation, etc. Inspection of equipment and medicine available in clinics, ambulance, etc.	Site Medical Team
Equipment inspections # According to legislation & guidelines	Use of checklists specific to the different types of equipment: lifting, piling, diving, marine vessels, compressed air, marine vessels, vehicles, electrical installations and grounding, hand tools, working at height equipment, etc.	Supervisor or SHE competent for the type(s) of equipment to be checked together with the inspector qualified by Law
Supervision Team Inspection # Weekly	Inspection of the work areas, of the checklists completed; checking of equipment and materials; observation of employee behaviors, interviews to assess Toolbox and JSEA effectiveness; review of incident investigation reports; identification of	One site SHE team member + area supervisors (including SUBCONTRACTOR)

This document is the property of SPCC who will safeguard its rights according to the civil and penal provisions of the Law.

	anomalous situations	+ system leaders for CCA during Commissioning.
Environmental Inspections # Weekly	Inspection of all the site areas: effectiveness of the wastes sorting and storage ; application of dust control ; containments in place, pollution traces, seashore aspect, applicable EIA mitigation measure etc.	Environmental supervisor.
SHE daily inspection 1# During the day/shift	Inspection with checklists prepared by the Site SHE team about the main risks associated to the works in the area (s) inspected.	Site SHE team member(s).
2# End of day/shift	To ensure that all work areas are secure and at minimum: ▪ All equipment is stopped and switched off, ▪ Collective protection equipment is in place, ▪ All personnel is off, ▪ The work areas are left clean and in order.	SHE Supervisor or Officer of each SUBCONTRACTOR checks their own work area(s).

Inspection forms have been reported within the SHE Manual for Construction

11.1.3. SHE Audits

Based on a project Audit schedule, the CONTRACTOR SHE Department will conduct audits of the work site, management system and status of compliance with the essential elements of applicable SHE practices, regulatory requirements, trends, results of previous inspections, accident/incident management, review of corrective action trends and progress.

In particular, as reference, the specific objectives of the Project SHE Audit are to verify:

- Respect of Laws and regulations;
- Responsibilities;
- Risk evaluation and management;
- Respect of the environment;
- Safeguarding of health;
- Competence and training;
- Emergency preparedness;
- Incident investigations;
- Inspections;
- General site conditions of construction areas;
- Project SHE documentation applicability;
- CONTRACTOR SHE organization;
- Project SHE procedure implementation;
- Follow up of previous recommendations.

Auditing will be performed by personnel not directly involved in the activities, also within the CONTRACTOR Organization, with the use of standard and specific check-lists; audit reports will define needed corrective actions in function of non-conformity highlighted during the inspection of the site.

This document is the property of SPCC who will safeguard its rights according to the civil and penal provisions of the Law.

Deficiencies identified during the audit are reviewed and analysed to determine potential failures in the SHE Management System and to develop appropriate corrective actions.

Findings are discussed with site key personnel during a closing meeting.

Deficiencies are documented along with the corrective actions, responsibility for completion and targeted completion dates.

Ref procedure: 122018-SPCC-C-SH-PR-0013 SHE AUDIT Procedure

Type # Frequency	Audit Scope	Audit team members
CONTRACTOR SHE audits # Yearly (minimum)	Audit of worksite SHE-MS to check compliance with CONTRACTOR rules and standards	CONTRACTOR SHE Department auditors
Monthly EIA external Audit	As per Environmental Monitoring Plan, to ensure that compliance with environmental monitoring and mitigation measures as per EIA requirement	Third party (UAE)
Internal Project SHE-MS audit (*) # Yearly (minimum)	To assess the effectiveness of all the SHE activities and processes described in the Project SHE-MS. Can be split into 2 to 4 sub-audits looking at different processes (*) The audits are conducted at a minimum frequency of 1 / year, unless otherwise specified by the Project Manager, who can establish shorter intervals (for instance in case of an unsatisfactory performance).	Site Internal auditors
Medical Audits # Yearly (minimum)	Health Management system: to verify that the site is implementing and complying with the Health Plan	CONTRACTOR Medical Coordinator
Environmental management audits # Bi-annual (minimum)	Audit of the Environmental system: compliance with procedures / plans, effectiveness of the monitoring plans, of the environmental surveillance. Can be combined with the Internal Site SHE-MS audit	One construction team member + SHE Mgr. or DSHE Mgr.
OHSAS 18001 audit # Yearly (maximum)	In the context of the OHSAS 18001 each project is able to be chosen by the certification body for performing a SHE-MS audit	Third Party auditors
PTTLNG Audit & safety Assessment # PTTLNG's Audits	Different types of audits / inspections can be carried out by the PTTLNG.	PTTLNG's team generally assisted by the CONTRACTOR Site SHE Management.

This document is the property of SPCC who will safeguard its rights according to the civil and penal provisions of the Law.

11.2. INCIDENT Reporting, Investigation & Follow-Up

Serious incidents and injuries will be immediately reported to the CONTRACTOR Management and PTTLNG/PMC and immediately investigated.

CONTRACTOR will ensure that an immediate oral report is made to the PTTLNG/PMC Representative in the case of:

- fatal Injuries;
- injuries requiring medical attention, which may or may not result in lost time;
- damage, in any amount, to PTTLNG equipment or property.

It is the duty of CONTRACTOR's and SUBCONTRACTORs to notify the SHE Management at site of any accident or incident immediately.

For accidents involving fatalities, lost time injury, medical treatment case, restricted work case, or damage to PTTLNG equipment or property, a preliminary report will be submitted to PTTLNG/PMC representatives. After investigation a final report will be submitted as well.

CONTRACTOR shall report to PTTLNG/PMC immediately on the occurrence of any injury to its employees, or SUBCONTRACTOR employees, incident or damage to equipment or Terminal, including near misses within twenty-four (24) hours of the occurrence. A detailed written report of incident shall be presented to PTTLNG/PMC within the next working day, with proposed measures to avert such incidents or occurrences. Accident and incident management shall incorporate PTTLNG/PMC's Key Performance Indicators (KPIs) requirements.

CONTRACTOR will update in the weekly SHE meeting on the status of follow-up actions and will co-operate and provide all requested information to assist in the investigation and preventive action of any accident or incident.

Written reports will be prepared and submitted according to a specific CONTRACTOR procedure Incident Notification and Investigation doc n 122018-SPCC-C-SH-PR-0014

CONTRACTOR shall incorporate accident/incident records in SHE monthly report to PTTLNG/PMC.

Register and records of all incidents involving WORK shall be maintained to assess SHE working performance and the need to introduce additional controls.

11.3. SHE Performance and Reporting

SUBCONTRACTORS are required to update statistics every week during the Weekly safety Meeting in accordance to the annex 1.

On a monthly basis the CONTRACTOR SHE Team will prepare a report to be issued within the 3rd day of each month to PTTLG including safety statistics, details of any hazardous incidents and activities relating to environmental aspects and EIA requirement.

For details relevant to the Environmental reporting please refer to the Environmental Management Plan issued for the PROJECT doc n. 122018-SPCC-C-SH-PR-0031.

This document is the property of SPCC who will safeguard its rights according to the civil and penal provisions of the Law.

11.3.1. IMPLEMENTATION AND MONITORING

Safety Statistics record keeping and reports

The DSHEM collect all SUBCONTRACTORs "Monthly Safety Statistical Reports" analyze all the information and fill the same form in SHE Monthly Report considering the totality of man-hours and recordable cases during the month, complete and provide the SHE Monthly Feedback at the close of each month to the SM and to the SHE Head Office.

Project SHE reporting for EIA compliance

Each SUBCONTRACTOR SHE Manager shall complete and submit the "Monthly Safety Statistical Report" (Annex1 of the present Plan and the 122018-SPCC-C-SH-RPT-0037) to the DSHEM at site first day of each month.

Safety performance will be analyzed every month considering in the Monthly SHE report (122018-SPCC-C-SH-RPT-0037) the Indicators and the Pro-active indicators.

In case result are not satisfactory additional action will be required to improve the site conditions.

SUBCONTRACTOR requirements

SUBCONTRACTORs have responsibility for the SHE of their operations irrespective of whether carried out by themselves or others.

SUBCONTRACTORs shall either:

- issue and keep up to date their own SHE Construction Plan that shall be in compliance with this document. All SUBCONTRACTORs shall comply with the most stringent of this document and their SHE Construction Plan; or
- fully adopt and comply with the requirements of this SHE Plan for Construction as if their own and other way improve with comments;
- provide specific SHE procedures (work instructions) for the works using procedures in this plan and into the SHE Construction Manual (SHE procedures for Construction as reported associated with the SHE Manual for Construction). SUBCONTRACTORS must also complies to the SUBCONTRACTORS SHE Requirements 122018-SPCC-C-SH-PR-0020.

This document is the property of SPCC who will safeguard its rights according to the civil and penal provisions of the Law.

11.4. OTHER SHE Aspects

11.4.1. Management Of Work Interferences

In case multiple works shall be carried out in the same area and are in some way interfering, in order to minimize the risk following step, shall be followed:

- a coordination meeting shall be arranged, interferences shall be pointed out and eventual additional safety measures planned. In case there isn't any chance to reduce the additional risk consequent to the work interference, works shall be shifted;
- a Work Permit shall be issued;

Depending on the interference typology following solutions could be considered applicable:

- one work activity will be interrupted up to the other will be completed;
- area will be fenced and signaled, inside this space nobody will be authorized to carry out any other activity, as in case of the lifting activity;
- apply collective protection;
- safety distances shall be respected;

All Construction and SHE Supervision shall be made aware and trained concerning the correct management of the works interference and in case of highlighted issue the Construction shall appoint a Superintendent as SIMOPS Coordinator (Simultaneous Operation).

11.4.1.1 Simultaneous Operations (SIMOPS)

Contractor has noted that, at certain stages, the execution of Work may take place in areas shared with PTTLNG's personnel and other Contractors /Subcontractors.

Work shall be performed simultaneously and may result in a high concentration of manpower in particular area.

During these periods, particular attention shall be paid to SHE conditions, both within the areas of Site and at the interface with adjoining areas. In addition Contractor shall be required to liaise with neighbouring workforces at management level and agree on procedures to regulate Work where interaction or SIMOPS may take place.

The Project Management Team must be aware of all the activities managed at the same time on the site and therefore can identify and anticipate possible co-activities or simultaneous operations (SIMOPS). A particular attention is paid to possible co-activity between construction works and operations of a live installation or plant area.

The SHE Manager establishes with the SIMOP Coordinator a specific SIMOPS plan or procedure which is endorsed by the Construction Manager and the Commissioning Manager.

- Deliverable: Simultaneous Operations procedure doc n. 122018-SPCC-C-SH-PR-0015

11.4.2. Occupational Hygiene

This document is the property of SPCC who will safeguard its rights according to the civil and penal provisions of the Law.

CONTRACTOR and SUBCONTRACTORs will put in place work methods and procedures to monitor the status at least of the following Occupational hygiene issues:

- Handling of chemicals;
- Dust monitoring;
- Noise;
- Vibration;
- Hygiene;
- Thermal comfort.

Further details will be provided in the 122018-SPCC-C-SH-PR-0030 SHE Manual for Construction and into the approved EIA.

11.4.3. Alcohol And Drugs



CONTRACTOR is committed to making the working and living environments under its direct control healthy and safe. Such environments include all sites, structures, installations, vehicles and equipment owned, rented, leased or managed by CONTRACTOR.

In accordance with its SHE Policy, CONTRACTOR puts its greatest attention in protecting the health of its own employees and the safety of its own activities. Therefore the abuse of alcohol and drugs is absolutely prohibited in the premises of the Project. These abuses can result in damages to the health of a person, as well as to the properties of the PTTLNG whether it be a conscious or an unconscious act by the people concerned. In order to monitor the compliance with its policy of zero tolerance, CONTRACTOR carries out regular post-accident, based on reasonable suspicion, and critical activities D&A tests. The regular tests are part of the pre-employment and periodical fitness examinations, which each employee is due for on an annual basis, and aim to determine the presence of the following substances: Alcohol, Methamphetamine, Morphine, Cannabis, Amphetamine, Cocaine, and Benzodiazepine. Employees that reacted positive to any of these substances are not certified fit for work. The other tests will be conducted on all work sites if there is no discrepancy with the local legislation that treats this subject. In order to define the process of Drug & Alcohol testing on work sites, CONTRACTOR has developed a work instruction " alcohol and drug testing". This procedure is applicable to all work sites and to all employees, for High risks activities and random testing.

In order to ensure that all employees are aware of the health and disciplinary consequences of alcohol and drug use and abuse CONTRACTOR organizes information sessions aiming to enhance their knowledge on the issue. As part of its health promotion initiatives, CONTRACTOR also could develops and distributes leaflets with accurate, easy to understand, comprehensive information on the health effects of drug and alcohol use and abuse.

11.4.4. Smoking



Being aware of the enormous harmful potential of the habit of smoking, CONTRACTOR is committed to take all possible appropriate measures to induce decrease in smoking on the worksites, in order to maintain a good working and living environment and avoid discomfort, diseases or accidents caused by smoking. The approach methods are:

- organizing awareness campaigns
- discourage smoking by implementing no-smoking policy in all office areas
- placing signs wherever smoking is forbidden
- verifying whether they are obeyed.

This document is the property of SPCC who will safeguard its rights according to the civil and penal provisions of the Law.

11.4.5. Driving Risks



All CONTRACTOR and SUBCONTRACTOR personnel who intend to drive for the Project must hold an appropriate and valid driving license for the vehicles, plant or equipment to be driven.

Local driving rules will be strictly followed by anyone who drives vehicles; in addition Construction Site and Plant rules will be followed.

CONTRACTOR shall maintain and enhance the awareness of safe driving among its employees and SUBCONTRACTOR's employees and will provide vehicles in good operating condition.

Where applicable, CONTRACTOR must ensure that its employees, and the employees of SUBCONTRACTORs, receive adequate driving instruction and that visible steps are taken to maintain a safe standard of defensive driving.

- Vehicles shall be fit for the purpose, regularly inspected and well maintained in accordance with good driving practices.
- All seats of all vehicles must be equipped with seat belts at least 2 with a conversion for new vehicle equipped only of three fixed-point type.
- Vehicles with roofs, which cannot withstand a rollover, should be fitted with roll bars.
- Vehicles used for isolated areas shall be equipped with survival kits comprising a two-way radio, drinking water, first aid kit, etc.
- No unauthorized usage of transport shall be tolerated by CONTRACTOR or SUBCONTRACTOR staff. The nominated Work Safety and Health Officer(s) should ensure that all forms of transport are correctly fitted with the appropriate safety equipment.

CONTRACTOR and SUBCONTRACTORS shall undertake to ensure that all drivers comply with the following basic rules:

- Possess a valid driver license;
- Always wear a seat belt;
- Always observe traffic rules, especially speed limits;
- Never drive after consuming alcoholic drinks or certain medicines/drugs;
- Never drive when very tired;
- Take regular stops when driving long distances;
- Be sure that the vehicle is properly maintained and in good condition for the planned journey;
- Never overload the vehicle; and,
- Drive defensively.

CONTRACTOR and SUBCONTRACTOR must assure to have an:

1) Assessment completed on the experience for drivers, according to the type of vehicle they drive;

2) Two point safety belts are still accepted on buses and minivans, however, each new contract with passengers transportation companies and purchase contracts of passengers vehicles shall contain the requirement of three point safety belts on all seats.

This document is the property of SPCC who will safeguard its rights according to the civil and penal provisions of the Law.

The speed limit on all work sites 20 Km/h, in neighbored roads out of the site 30Km/h, in public roads less than 80Km/h as stated within the EIA, and populated areas should be announced and posted for passenger and material transport vehicles.

CONTRACTOR and SUBCONTRACTOR's driver couth by police on the public road violating traffic rules will be immediately dismissed by PROJECT; at site in violation of traffic rules, shall be punished with a project fine of 15000THB and if an incident will result from the violation the immediately dismissed by PROJECT.

11.4.6. Stop Work Authority. Unsafe Conditions & Acts

It is important to note that, as indicated in the SHE policy, CONTRACTOR, PTTLNG and SUBCONTRACTORS are entitled to stop any activity if it is believed to involve any hazard. This "Stop work authority" is granted to all project personnel.

Non-compliance with the requirements of the SHE Management Plan(s) shall be considered as misconduct for which PTTLNG or its Project Management Consultant (PMC) shall have the right to require CONTRACTOR to remove offending personnel from Site. In certain cases, PTTLNG/PMC may suspend work that is considered by PTTLNG/PMC as unsafe, until compliance with safety regulations has been re-established.

On the request of PTTLNG/PMC, any unsafe operation/practice by CONTRACTOR or its SUBCONTRACTOR shall be stopped immediately and rectified at CONTRACTOR or its SUBCONTRACTOR cost to the satisfaction of PTTLNG/PMC. For such suspension of Work, CONTRACTOR is not allowed to claim the delay of the planned schedule.

If, during the execution of Work, conditions at a particular location within Site are deemed unsafe by CONTRACTOR, he shall notify PTTLNG/PMC immediately.

PTTLNG/PMC shall be responsible for verifying that Site is safe before Work recommences.

11.4.7. LANGUAGES REQUIREMENTS

The language difficulties with the multinational workforce are identified and the worksite ensures information is provided in a manner that can be understood by all concerned. Worksite utilizes multiple meetings and multiple languages if required to assure effective communication with each audience.

- The PROJECT Language is English for PROJECT documents and all managers.
- Thai will be used where needed to communicate with workforce.
- In particular, safety booklets, jobsites signs & road signs, Permit to work forms will be bilingual in Thai & English.

This document is the property of SPCC who will safeguard its rights according to the civil and penal provisions of the Law.

Annex 1 – CONTRACTOR'S SAFETY REPORTING AND INDICATORS

This document is the property of SPCC who will safeguard its rights according to the civil and penal provisions of the Law.

CONTRACTOR INTERNAL - PRO ACTIVE INDICATORS

1 Rev: | 2 Date:

3 Pag 1/1

12. Month:
Year:

Company……..

4 Project / Site / ……..

Compiled by: | Date:

13. GENERAL SUMMARY **5 PRO-ACTIVE INDICATORS**	**14. Monthly total** (SPCC)	**15. Monthly total** (Subcontractor)	**16. Monthly total** (SPCC & Subcontractors)	**Total since the beginning of Project / year *** (SPCC)	**Total since the beginning of Project / year *** (Subcontractor)	**Total since the beginning of Project / year *** (SPCC & Subcontractor)
No. of ***SHE Training Hours***						
No. of ***Senior management SHE Visits***						
No. of ***Toolbox Talks***						
No. of ***Job Safety Environmental Analysis***						
No. of ***SHE Meetings***						
No. of ***SHE Inspections***						
No.of ***Safety/Hazard Observation Cards***						

NOTE:	Deputy SHE Manager ……..	Site Manager ……..

This document is the property of SPCC who will safeguard its rights according to the civil and penal provisions of the Law.

CONTRACTOR INTERNAL SAFETY INDICATORS

Pag 1/1

17. Month:
Year:

Company……..
Project / Site / ……

Compiled by:

Date:

18. GENERAL SUMMARY **19. SAFETY INDICATORS**	**20. Monthly total** (SPCC)	**21. Monthly total** (Subcontractor)	**22. Monthly total** (SPCC & Subcontractor)	**Total since the beginning of Project / year°** (SPCC)	**Total since the beginning of Project / year°** (Subcontractor)	**Total since the beginning of Project / year°** (SPCC & Subcontractor)
Average Manpower						
Total Worked Manhours						
No. of ***Fatal Accidents***						
No. of ***Lost Time Injuries***						
No. of ***Work Restricted Cases***						
No. of ***Medical Treatment Cases***						
No. of ***First Aid Cases***						
No. of ***Commuting Injuries***						
No. of ***Near Miss***						
No. of ***Lost Workdays***						
No. of ***Restricted Workdays***						
No. of ***Road Traffic Accident (RTA)***						
Km Driven						

This document is the property of SPCC who will safeguard its rights according to the civil and penal provisions of the Law.

Lost Time Injury Frequency Rate (LTIFR)						
Total Recordable Frequency Rate (TRFR)						
Severity Rate (SR)						

NOTE:	Deputy SHE Manager ……..	Site Manager ……..

This document is the property of SPCC who will safeguard its rights according to the civil and penal provisions of the Law.

PTTLNG Nong Fab LNG Receiving Terminal Project

SHE PROCEDURES

Doc. Class Z2

[redacted]

REV.	STATUS	DATE	REVISION DESCRIPTION	BY	CHK.	APPR.

This document is the property of SPCC who will safeguard its rights according to the civil and penal provisions of the Law.

Revision list:

Rev. Nr	Modifications:
R1	First Issue
R2	Issue for comment from client
F1	Issue for Final implementing comments from client and arranged according to the approved Project SHE Plan for construction
F2	Issue after SPCC internal review
F3	Issued after revised methodology for definition of safety zone during pneumatic pressure testing- SHE Procedures (Pneumatic Test) - page 242

This document is the property of SPCC who will safeguard its rights according to the civil and penal provisions of the Law.

TABLE OF CONTENTS

1 GENERAL 5
2 PROJECT SHE & SECURITY PLAN 5
3 REFERENCES 6
4 LANGUAGE 8
5 HAZID OF CONTRUCTIONS CRITICAL ACTIVITIES 9
6 PERMIT TO WORK SYSTEM (PTW) 10
7 JOB SAFETY AND ENVIRONMENT ANALYSIS; JSEA 10
8 SAFETY TASK ASSIGNMENT 11
9 INSTRUCTION – ORIENTATION, TRAINING AND SAFETY MEETINGS 11
10 SHE COMMUNICATIONS 13
11 RECORDKEEPING OF INCIDENTS AND TRAINING 13
12 DRUGS AND ALCOHOL POLICY 14
13 SHE INSPECTIONS 15
14 FIRE PROTECTION/PREVENTION 16
15 FIRE PROTECTION/HOT WORK (WELDING, CUTTING, BURNING, ETC.) 17
16 THIRD PARTY SHE INSPECTIONS 18
17 CONSTRUCTION EMERGENCY PREPAREDNESS PLAN AND DRILLS 18
18 CRANES AND DERRICKS 18
19 EQUIPMENT AND MOTOR VEHICLES 18
20 ELECTRICAL 19
21 LIGHTENING PROTECTION 19
22 FLOOR AND WALL OPENINGS AND STAIRWAYS 20
23 LADDERS 20
24 EXCAVATIONS AND TRENCHING 21
25 STEEL ERECTION 22
26 CONFINED AREAS OR SPACES 22
27 SANITATION 23

This document is the property of SPCC who will safeguard its rights according to the civil and penal provisions of the Law.

28 LUNCH / BREAK AREAS 24
29 HEAT STRESS 24
30 SMOKING 24
31 IONIZING RADIATION 25
32 HEXAVALENT CHROMIUM 26
33 PAINTING AND BLASTING 26
34 LIVE LINES 27
35 PERSONAL PROTECTIVE EQUIPMENT 27
36 SIGNS, SIGNALS, BARRICADES AND LIGHTS 28
37 RIGGING EQUIPMENT 29
38 POWER TOOLS AND HAND TOOLS 29
39 COMPRESSED GAS CYLINDERS 30
40 SCAFFOLDS 30
41 TEMPORARY PIPE SUPPORTS 31
42 EQUIPMENT PRESERVATION 31
43 MONTHLY INSPECTION PROGRAM 31
44 DRIVING & TRANSPORTATION 32
45 OCCUPATIONAL HEALTH 33
46 FIRST AID AND INJURY REPORTING REQUIREMENTS 33
47 SHE PENALTIES 35
48 REQUEST REMOVAL OF CONTRACTOR PERSONNEL 36
49 SECURITY 36
50 PROTECTION OF WORKERS, THE PUBLIC, ASSETS AND ENVIRONMENT 37
51 ATTACHMENT 37

This document is the property of SPCC who will safeguard its rights according to the civil and penal provisions of the Law.

1 GENERAL

The purpose of this Procedure is to outline, describe and define the requirements for SPCC, as per PTTLNG Health, Safety, Security and Environmental (SHE) management program and it's SHE & security policies to meet throughout the execution of the PROJECT.

The purpose of these safety and health requirements is to ensure compliance to regulatory requirements and to prevent incidents or events that could result in fatality, injury or illness to personnel and/or damage to environment or property.

SPCC (JV Saipem & CTCI) shall comply with all the applicable Health, Safety and Environment ("SHE")LAWS and PERMITS pertaining to safety, health, environmental protection and fire protection, which are applicable to the location, where the WORKS are being carried out.

SPCC will also comply at all times with the requirements, as set forth by the PTTLNG in its Safety, Health and Environment Management System ("SHE MS"), policies, operating standards, WORKSITE SHE requirements, and any special instructions and all requirements stipulated in this CONTRACT.

These requirements are intended to supplement any safety and health requirements imposed by LAW with which the SPCC is obliged to comply. SPCC will also adhere to any safety and health procedures as may be imposed by PTTLNG.

2 PROJECT SHE & SECURITY PLAN

PROJECT SHE & SECURITY PLAN which has to be submitted to PTTLNG for approval within thirty days (30) days after COMMENCEMENT DATE and in any case prior to the commencement of any SPCC's activities on the WORKSITE. This document will be an umbrella' document which will need to be supported by other SHE procedures.
SPCC will implement and maintain its own SHE procedures, work instructions and guidelines during the construction aspects of the WORKS.
The PROJECT SHE PLAN will be agreed with PTTLNG prior to its implementation and will be subject to periodic audit by PTTLNG. It needs to refer, as a minimum, but not limited, to the following elements of SHE management:

- ✓ Leadership and commitment;
- ✓ Policy and strategic objective;
- ✓ Organization, responsibilities, resources, standards and documents;
- ✓ Health management;
- ✓ Environment management;
- ✓ Safety & transportation management;
- ✓ SHE risk management / reviews;
- ✓ SHE training and familiarization;
- ✓ Prevailing LAWS and regulations;
- ✓ Planning and procedure;
- ✓ SHE management of Subcontractor;
- ✓ Process safety, safe operations, asset integrity;
- ✓ Management of change;
- ✓ Competence assurance;
- ✓ Incident management and emergency response;

This document is the property of SPCC who will safeguard its rights according to the civil and penal provisions of the Law.

- ✓ Implementation and monitoring;
- ✓ Management review.

SPCC will need to develop a number of security & emergency response procedures, work instructions and guidelines in order to ensure the security and crisis management of the worksite.

3 REFERENCES

A. CONTRACTUAL

Applicable SHE documents of PTTLNG:

PTTLNG'S References	Doc. N°
1602088-32016-CV-TS-003-F0	Specification for Drainage System
1602088-32016-GE-005-F0	PROJECT Reference Codes and Standards
1602088-32016-MG-TS-004-F0	Specification for Acoustical Insulation
1602088-32016-PM-GE-001-F4	PROJECT Procedures and Administrative Requirements (General PROJECT Requirement) Section 9. SHE
1602088-32016-PM-GE-008-F0	List of Documents to be Submitted During Detail Design for Each Discipline. Appendix F. Section 1.5 SHE
1602088-32016-PM-GE-015-F0	Site Safety and Security Procedure (Template)
1602088-32016-PM-GE-019-F0	Change Procedure
1602088-32016-PM-GE-028-F0	Environmental Impact Assessment (EIA). Appendix E-1
1602088-32016-PM-RPT-103-F0	PTT Environmental Management Plan
1602088-32016-PM-RPT-104-F0	PTT Personnel Protection
1602088-32016-PM-RPT-105-F0	PTT Environmental Specification
1602088-32016-PM-RPT-106-F1	PTT HSE Legislation
1602088-32016-PM-RPT-109-F1	PTT Corporate Worksite Health, Safety & Security
1602088-32016-PM-RPT-110-F0	PTT Corporate SH&E Pre-Qualification Expectations
1602088-32016-PM-RPT-111-F0	PTT Corporate Work Site Environmental Requirements
1602088-32016-PM-RPT-113-F0	PTT Safety and Health Management Plan

B. INTERNATIONAL CODES AND THAI LEGISLATION AND STANDARDS

International treaties
United Nations Conference on the Law of the Sea
Environmental, Health, And Safety Guidelines Liquefied Natural GAS Facilities – IFC - WB
Vienna Convention for the Protection of the Ozone Layer, including the Montreal Protocol and the London Amendment
Convention Concerning the Protection of the World Cultural and Natural Heritage or World Heritage Convention

This document is the property of SPCC who will safeguard its rights according to the civil and penal provisions of the Law.

Basel Convention on the Control of Transboundary Movements of Hazardous Wastes and their Disposal
Occupational Safety and Health Administration - OSHA

Thailand national Laws

Notification of Industry Industrial Effluent Standard B. E. 2560
National Environmental Quality Act BE 2535 (NEQA 1992)
Ministerial Regulation on the Prescribing of Standard for Administration and Management of Occupational Safety, Health and Environment in relation to Hazardous Chemicals, B.E. 2556 (A.D. 2013), Fire Prevention and Control, B.E. 2555 (A.D. 2012), Machines.
Ministerial Regulation on the prescribing of Standard for Administration and Management of Occupational Safety, Health and Environment B.E. 2552 (A.D. 2009)
Safety, Occupational Hygiene and Workplace Environment Act B.E. 2554 (2011) Ministerial Order No. 123/2555 re: Appointment of OSH inspectors to under the OSH Act 2011.
Notification of the Ministry of Labor concerning Specific Health Check-up for Employees Performing Works in relation to Chemical Risk Factors, B.E. 2552 (A.D. 2009)
Ministerial Regulation on the Standard for Administration and Management of Safety, Occupational Health and Working Environment in Relation to Construction work year/ 2009
Labor Announcement Regarding safety signs and safety symbol /year 2011
Labor Announcement Regarding PPE Standards / year 2011
Labor Announcement Regarding yearly equipment inspection / year 2011
Ministerial Regulation Regarding building control / year 2009
Law Ministerial Regulation on the prescribing of Standard for Administration and Management of Occupational Safety, Health and Environment B.E. 2549 (A.D.2006)
Ministerial Regulation, issued under the Factory Act
Factory Act BE 2535 (1992)
Public Health Act BE 2535 (1992)
Hazardous Substances Act BE 2535 (1992)
Oil Fuel Storage Act BE 2542 (1999)
LPG Storage Act BE 2538-2450 (1995 - 1997)
Fire Protection & Prevention Act BE 2542 (1999)
Building Control Act BE 2522 - 1979/ Building Control Act No. 2 BE 2535 - 1992 and Associated Ministerial Regulations.
Protective Measures for Operational Safety, Notification of Ministry of Industry No. 3 (BE 2542 - 1999) issued under the Factory Act.
Safety Standards for Chemicals by Department of labor based on ACGIH standards
Occupational Noise Levels. Ministry of Industry Notifications (Document No.4, 1971)
Occupational Noise Levels. Ministry of Interior Notification (1976).
Lighting levels: Safety Standards for Lighting Labor Standard of the Ministry of Interior (1977).
Announcement of the Ministry of Industry on Requirement for Installation of Special Tools or Instruments in Various Types of Factories for Automatic Air Quality Monitoring/Inspection from its Chimneys (BE 2544),
The Industrial Estate Authority of Thailand Port Regulations 1997 Concerning Port.
Affairs on Services, Facilities, Safety Control, Environmental Protection and Related Activities
Notification of MSTE (Ministry of Science, Technology and Environment) Ref EPA.
Standard for Determination of NOx, SOx and Particulate Emissions from Stationary Sources of Flue Gas dated 25/12/95.
Energy Conservation Promotion Act BE 2535 (1992).
The Industrial Estate Authority of Thailand (IEAT) and Eastern Fluid Transport (EFT) Regulations in respect to the issue of permits and the associated health, safety and environment requirements.
Affairs on Services, Facilities, Safety Control, Environmental Protection and Related Activities

This document is the property of SPCC who will safeguard its rights according to the civil and penal provisions of the Law.

Notification of MSTE (Ministry of Science, Technology and Environment) Ref EPA.
Standard for Determination of NOx, SOx and Particulate Emissions from Stationary Sources of Flue Gas dated 25/12/95.
Energy Conservation Promotion Act BE 2535 (1992).
The Industrial Estate Authority of Thailand (IEAT) and Eastern Fluid Transport (EFT) Regulations in respect to the issue of permits and the associated health, safety and environment requirements.

This document is the property of SPCC who will safeguard its rights according to the civil and penal provisions of the Law.

Energy Conservation Promotion Act BE 2535 (1992).
The Industrial Estate Authority of Thailand (IEAT) and Eastern Fluid Transport (EFT) Regulations in respect to the issue of permits and the associated health, safety and environment requirements.
Affairs on Services, Facilities, Safety Control, Environmental Protection and Related Activities Notification of MSTE (Ministry of Science, Technology and Environment) Ref EPA.
Standard for Determination of NOx, SOx and Particulate Emissions from Stationary Sources of Flue Gas dated 25/12/95.
Energy Conservation Promotion Act BE 2535 (1992).
The Industrial Estate Authority of Thailand (IEAT) and Eastern Fluid Transport (EFT) Regulations in respect to the issue of permits and the associated health, safety and environment requirements.

4 LANGUAGE

SPCC will develop procedures and instructions to ensure effective communications are in place to deal with any multi-lingual personnel employed at WORKSITE who do not understand and/or cannot communicate in English languages. SPCC will identify to PTTLNG its strategy for meeting these multi-lingual needs sufficiently in advance of commencement of the WORKS at the WORKSITE

C. General Obligations

a. SPCC will provide to PTTLNG a copy of all reports made to government agencies or insurance companies relating to any Worksite accident, injury, or incident during SPCC's performance of the Work.

b. Any Worksite-specific SHE requirement, which exceeds the minimum standards established by regulation, shall be incorporated into SPCC's SHE program/procedures.

c. SPCC will attend a preconstruction meeting with PTTLNG to understand the project conditions and SHE requirements prior to starting Work at the Worksite. A Worksite tour shall be made to facilitate SPCC's awareness and understanding of potential hazards.

d. Appropriate methods, equipment, devices, and material shall be provided by SPCC to ensure a safe workplace.

e. SPCC's SHE Representative has the responsibility to translate site-or contract-specific activities and requirements into specific plans and procedures that provide direction for ensuring environmental protection requirements are met. This documentation shall identify, for each area of concern, specific actions that shall be taken and responsibility for their implementation. Actions shall be based on regulatory or other requirements tailored to the project and contract scope of Work and technical requirements. Required SHE documentation shall be developed and implemented prior to commencement of affected activities.

This document is the property of SPCC who will safeguard its rights according to the civil and penal provisions of the Law.

D. Hazardous Substances

a. SPCC will be responsible for immediately notifying PTTLNG in writing of any hazardous chemicals or substances that are brought on Worksite or cause to have been brought on Worksite. SPCC shall provide PTTLNG with a copy of SPCC's Hazardous Material and Communication Program and the Safety Data Sheet(s) (SDS [or equal]) for the chemical(s) or substance(s) intended for use on the Worksite. SPCC shall be responsible for keeping this information current. SPCC shall be responsible for maintaining a copy of SPCC's Hazard Communication Program and access to SDSs (or equal) on site for SPCC's own reference and employee training. All records shall be maintained at a location accessible to PTTLNG.

b. The legal storage, use, and disposal of any hazardous chemical or substance, and the disposal of waste materials brought on Worksite by SPCC, shall be the responsibility of SPCC.

c. SPCC employees shall be protected from inhaling hazardous substances in quantities that exceed national or international “allowable limits/exposure limits.”

5 HAZID OF CONTRUCTIONS CRITICAL ACTIVITIES

SPCC will perform a HAZID prior to the commencement of the WORK in order to identify the critical fabrication activities where appropriate levels of management will be required to comply with SHE requirements. Typical examples of critical activities, which may require special SHE requirements at the WORKSITE include:

- ✓ Transportation of heavy equipment;
- ✓ Loading, unloading of heavy equipment;
- ✓ Lifting and installation of heavy equipment;
- ✓ Other equipment requiring lifting and transportation;
- ✓ Traffic management;
- ✓ Work at height during simultaneous operations ;
- ✓ Management of SPCC’s specific WORKSITE;
- ✓ Coordination with OTHER SPCCS in accordance with the requirements of the SITE MANAGEMENT RULES;
- ✓ Fabrication activities and fabrication risks;
- ✓ Drainage systems;
- ✓ Crossings / bridges / roads / paths;
- ✓ Precautions and measures in place for flood conditions;
- ✓ All other issues raised as part of the HAZID.

If one HAZID session is insufficient for the SPCC’s activities, then additional

This document is the property of SPCC who will safeguard its rights according to the civil and penal provisions of the Law.

HAZID sessions shall be performed by SPCC and SPCC is obliged to invite PTTLNG to attend any HAZID session.
SPCC's SHE Manager(s) and SHE Officers will ensure that all issues raised during all HAZID sessions as well as other critical fabrication matters raised throughout the performance of the WORK are followed-up and addressed.

6 PERMIT TO WORK SYSTEM (PTW)

The Permit to Work ("PTW") System constitutes a formal method of ensuring safe work practices or a specific activity with identified hazards. The work permit granted through the PTW System stipulates the safety and precautionary or risk control measures to be applied with reference to the specific procedure.

PTW System will be prepared by CONTRACTOR and issued to the SPCC and all OTHER SPCCS and shall cover all activities on the SITE. The typical activities, where the PTW System will apply, as a minimum, are:

- ✓ Work at height;
- ✓ Confined space entry;
- ✓ Electrical isolation & re-activation;
- ✓ Welding / cutting / machining;
- ✓ Painting and surface blasting;
- ✓ Excavation;
- ✓ Piling;
- ✓ Heavy lifting;
- ✓ Scaffolding erection;
- ✓ Radiography work;
- ✓ Critical lifting ;
- ✓ Diving works
- ✓ Hot work (during COMMISSIONING and at locations near flammable materials).
- ✓ Prepare Critical Lift Permits and any required rigging designs.

The PTW System shall be organized, developed and controlled appropriately by CONTRACTOR to be in line with the PTTLNG SHE MANAGEMENT PLAN and fully applicable for each phase (e.g. CONSTRUCTION, COMMISSIONING etc.).

7 JOB SAFETY AND ENVIRONMENT ANALYSIS; JSEA

Prior to SPCC commencing Work at the Worksite, SPCC and all of its SPCCs will provide, for PTTLNG's review and non-objection, a detailed JSEA. This analysis shall identify the scope of Work, known and potential hazards, and corrective measures

This document is the property of SPCC who will safeguard its rights according to the civil and penal provisions of the Law.

and controls that shall be implemented to abate these hazards.

SPCC will ensure that all of its line supervisors fully understand the potential hazards involved in those aspects of the WORK under their supervision and that safe practices, safety precautions or actions to be followed in respect of the same and SPCC shall ensure that its line supervisors communicate these issues to all personnel involved in each activity forming part of the WORK prior to commencement of each activity forming part of the WORK.

SPCC will ensure that all JSEA carried out during performance of the WORK will be reviewed and approved by SPCC's SHE Representative and PTTLNG's designated SHE Manager.
SPCC shall pay special attention to the critical activities of transportation, fabrication, construction, and COMMISSIONING, in addition to interface with the OTHER SPCCS.

Before assigning personnel to any activity forming part of the WORK, SPCC shall carry out a JSEA for such activity.
The JSEA plays a significant role for the risk assessment of the various activities being carried out by SPCC at the WORKSITE and SPCC shall ensure that its results, together with
outcomes and conclusions are communicated to all personnel working on the WORKSITE by the appropriate means, which shall include presentations, meetings and tool box talks.
In addition to that, specific Method Statements and JSEA will be required to be developed and communicated for critical activities, as identified on the WORKSITE.

8 INSTRUCTION – ORIENTATION, TRAINING AND SAFETY MEETINGS

SPCC shall be required to provide instruction and training of its employees. Examples of such documented training to be provided by SPCC include, but are not limited to:

- ✓ Indoctrination/Orientation – Newly employed, promoted, and/or transferred employees shall be verbally instructed in the SHE practices required by their Work assignments. SPCCs shall reserve at least 6 hours per employee for orientation, issue of entry badges, and project SHE training initiatives.
- ✓ Work Assignments – All Work assignments shall include specific attention to SHE concerns. "Follow-up" monitoring shall be required in order to prevent accidents (JSEAs).

A. Meeting

- ✓ Weekly craft toolbox safety meetings shall be properly conducted and recorded. Additionally, staff meetings shall have a portion of the agenda devoted to SHE and accident prevention.

B. Special SHE meetings

SPCC shall arrange additional meetings to address special circumstances that may arise such as:

- ✓ Activities forming part of the WORK which require special instructions and precautions that have not been implemented at WORKSITE;
- ✓ Visits by government bodies or authorities due to non-compliance with LAW;
- ✓ Poor performance of specific Subcontractors;
- ✓ Major non-conformance with SHE requirements;
- ✓ Major incidents such as fatality, major fire or explosion;

This document is the property of SPCC who will safeguard its rights according to the civil and penal provisions of the Law.

- ✓ Security and emergency response incidents;
- ✓ Major impacts on SHE resulting from design changes during the construction phase of the WORK or potential hazards which were unknown prior to the LETTER OF AWARD.

Meetings shall be held between these personnel to discuss those hazards identified and to propose solutions to such hazards and any unsafe acts/conditions.

All SHE meetings shall be documented and the minutes of meeting submitted to PTTLNG within three (3) calendar days of such meeting, excluding in relation to those special or emergency SHE meetings (as described in the relevant minutes of meeting) which shall be submitted to PTTLNG immediately following the meeting.

C. Weekly Mass Toolbox Talk

SPCC will ensure that SPCC conduct a weekly mass “toolbox talk” at the start of each shift in a language understood by the relevant workforce.

Toolbox talks may be conducted by SPCC’s safety representatives, line supervisor or management. Topics for the toolbox talk shall be agreed between SPCC and SUB-CONTRACTOR.

This document is the property of SPCC who will safeguard its rights according to the civil and penal provisions of the Law.

9 SHE COMMUNICATIONS

Effective communications are vital to the successful implementation of the Project SHE Plan, Project Security Plan and Project Emergency Response Plan for the PROJECT. Communications will take many forms but their common objective is to improve understanding of SHE matters. SPCC will propose its overall strategy for communications of all matters relevant to SHE both for those involved in the PROJECT and at WORKSITE as required, in the Project SHE PLAN.

A. Craft and workers

Craft and workers will be trained in the life critical safety aspects of their job and will attend a training session of 8 hours minimum. Examples are: welder to be trained in Hot-work safety, steel erectors, scaffold builders and other required to work at an elevation to be trained in elevated work safety, people required to work in confined spaces to be trained in confined space and vessel entry safety, crane operator and riggers and signalmen to be trained in crane operation and rigging safety and drivers to be trained in driving safety awareness and defensive driving, etc.

B. Supervisors

All field supervisors and foremen shall attend a shall be trained a 2-days of safety supervisor/foremen courses to complying with the Thai Law. Safety standards and requirements will be dealt with in detail. This training shall be completed within 60 days of the employee's start-of-work at the project site.

C. Operators

SPCC shall submit prior to the mobilization of same the certifications for the following disciplines:

- ✓ Crane Operators
- ✓ Forklift Operators
- ✓ Plant / Heavy Equipment Operators
- ✓ Riggers
- ✓ Scaffolders / Inspectors
- ✓ Excavation Inspectors
- ✓ Confined Space Entry Hole Watchers
- ✓ Authorized Gas Testers

10 RECORDKEEPING OF INCIDENTS AND TRAINING

SPCC's responsibility is to maintain all records required by PTTLNG, state, local,

This document is the property of SPCC who will safeguard its rights according to the civil and penal provisions of the Law.

Workers' Compensation Insurance, or similar in-country regulations. This includes the maintenance of an accident log, annual summary, and the posting of all prescribed posters.

A log of SHE activities, near misses, accident investigations, employee instruction, training, toolbox meetings, etc., shall be maintained on Worksite and copies shall be promptly provided to PTTLNG upon request and in accordance with the Contract.

11 DRUGS AND ALCOHOL POLICY

PTTLNG's policy with regard to drugs and alcohol is very clear, SPCC will follow-up this policy :

'***No personnel are allowed at the WORKSITE to work under the influence of alcohol, drugs or other intoxicating substances, other than medically prescribed medication given by a Medical Doctor.'***

PTTLNG reserves the right to randomly require SPCC's and SUB-Contractor's employees to undertake a drugs & alcohol test and to terminate the employment of personnel, if they are found to be under the influence of alcohol, drugs or other intoxicating substances. These same rules also apply to drivers of buses, lorries or other vehicles operating within on SITE and operators of the SPCC's EQUIPMENT and other equipment during their presence on the SITE.

The possession, use, manufacture, distribution, or dispensation of any illegal drug or controlled substance shall be prohibited on PTTLNG property. In addition, SPCC employees working on PTTLNG property shall be expected to report for Work in proper condition and not be under the influence of any controlled substance.

SPCC agrees to provide for Work on the property of PTTLNG only those employees who understand the requirement of this Article and who will comply. SPCC agrees that, prior to assignment to Work under this Contract, such employees shall be chemically screened and confirmed. SPCC employees shall also be required to submit to (urinalysis) testing based upon reasonable suspicion, including aberrant behavior and post accidents report to Work in proper condition and not be under the influence of any controlled substance.

In addition, depending upon job requirements, SPCC employees may be subject to periodic random (urinalysis) testing. SPCC employees failing to conform to testing requirements or failing such tests shall be removed from the Worksite immediately and shall be restricted access to the project for an interval to be determined by PTTLNG site management. SPCC shall submit a copy of its Substance Abuse Prevention Program to PTTLNG for review and approval. PTTLNG shall also periodically review SPCC's program to ensure compliance with this Article.

Violation of this Article by SPCC may, at PTTLNG's option, be deemed by PTTLNG to be a material breach of this Contract and subject the SPCC to termination for default, as well as other remedies under contract, law, or equity.

This document is the property of SPCC who will safeguard its rights according to the civil and penal provisions of the Law.

12 SHE INSPECTIONS

SPCC's SHE Representative(s), designated as Competent Person(s), will be required to conduct and document routine SHE inspections (as directed by regulation, or, at a minimum, weekly for SHE-related inspections). These inspections shall include but not be limited to:

- ✓ Daily Site / Area Inspections
- ✓ Monthly Equipment / Material Inspections

This document is the property of SPCC who will safeguard its rights according to the civil and penal provisions of the Law.

13 FIRE PROTECTION/PREVENTION

The SPCC will be responsible 24 hours per day, 7 days per week for fire protection in its work and operational areas, including offices, tool rooms, and storage areas. SPCC must provide approved fire-fighting equipment at the work places and offices in adequate quantities and its employees must be trained in the usage of such equipment.

SPCC will at a minimum comply to the following requirements:

- ✓ Develop and present to PTTLNG for review a fire prevention training program and implement it to the work force.
- ✓ Adequate distance for firefighting equipment shall be maintained between temporary structures and permanent facilities.
- ✓ The use of wood or combustible temporary shacks around permanent buildings under construction shall be minimized. All temporary shacks shall be kept a minimum distance of 20 meters from the perimeter walls of such buildings.
- ✓ Temporary buildings and shelves and storage containers in warehouses shall

This document is the property of SPCC who will safeguard its rights according to the civil and penal provisions of the Law.

be built of non-combustible materials.

- ✓ Fireproofed cabinets or other fire resistant storage facilities shall be used wherever important documents are stored.
- ✓ Provide and maintain in accordance with the equipment inspection / maintenance schedule; alarms and smoke detectors.
- ✓ Provide portable or permanently mounted extinguishers shall be available within 10 meters of a workforce involving welding, burning or the use of an open flame.
- ✓ Each welder shall use welding blankets in order to contain weld splatter.
- ✓ At least one permanently mounted fire extinguisher shall be provided in each building near the door. Additional extinguishers shall be mounted so as to have one available within 20 meters of any point inside the building.
- ✓ Extinguishers shall be located within 15 meters of any point on the perimeter of material stored in fuel or combustible materials storage areas. Additionally, these areas shall be identified with signs restricting vehicle access and prohibiting fire ignition sources and smoking.
- ✓ A permanently mounted extinguisher shall be placed on each item of mobile industrial equipment having a diesel or gasoline engine, and on all welding machines.
- ✓ All fire prevention/firefighting equipment shall be inspected monthly to ensure they are in a good working order and replaced if faulty. Records of inspections shall be maintained for review by PTTLNG, as applicable.
- ✓ Equipment shall be switched off during refueling.

14 FIRE PROTECTION/HOT WORK (WELDING, CUTTING, BURNING, ETC.)

A. CONTRACTOR shall regulate smoking, open fires, carrying matches, and welding permits when and where deemed necessary in the interest of safety. SPCC will be responsible for and enforce requirements on SPCC employees, the employees of all SPCCs and visitors, who shall comply with the regulations and restrictions as directed. These smoking, open fires and similar regulations may vary during the progress of construction, or during testing or initial operation of any portion of the plant.

B. Within certain areas designated as "OPEN AREAS," CONTRACTOR shall issue a "HOT WORK PERMIT" on a daily basis that shall authorize open flames, burning, and welding activities during regularly scheduled Work hours.

C. Within certain areas designated as "RESTRICTIVE AREAS," CONTRACTOR shall issue a "HOT WORK PERMIT" daily that shall authorize open flames, burning, and welding activities during regularly scheduled Work hours. Smoking shall be permitted only in designated compounds. "OPEN AREAS" shall be reclassified as "RESTRICTED AREAS" whenever designated by PTTLNG and upon completion. For “RESTRICTED AREAS,” a trained person, referred to as a “fire watch,” shall be assigned and equipped with personal protective equipment provided by SPCC.

D. The fire watch shall be maintained during lunchtime and other breaks and shall continue for 30 minutes after welding operations have been completed. This individual

This document is the property of SPCC who will safeguard its rights according to the civil and penal provisions of the Law.

shall keep the area clear of unauthorized personnel during welding operations.

15 THIRD PARTY SHE INSPECTIONS

In addition to visits and SHE inspections by its own corporate or insurance representatives, SPCC is advised that the project may be inspected from time-to- time by authorized third parties. Among others so authorized shall be representatives of PTTLNG, insurance companies, and regulatory agencies. Upon their proper identification, they shall be entitled to Worksite access and courteous consideration. PTTLNG shall be made aware, if possible in advance, but in any case as soon as possible, of the purpose and results of such visits that relate
to SHE concerns.

16 CONSTRUCTION EMERGENCY PREPAREDNESS PLAN AND DRILLS

SPCC shall provide an area Emergency Preparedness Plan for evacuation of the Work area in the event of a natural disaster and/or project emergency. SPCC will be responsible for advising its employees and those of sub/lower-tier SPCCs of the potential hazards, emergency signals, and primary evacuation routes. SPCC is advised that mandatory periodic emergency evacuation drills shall be held. Any time lost by the SPCC in complying with these drills shall not be reimbursable.

17 CRANES AND DERRICKS

All cranes and derricks shall be certified as being in safe operating condition by a third party Inspection prior to submitting it to PTTLNG for review. The PTTLNG will inspect the crane/derrick, review the third party inspection certificate insurance certificate and drivers/operator license prior to the issuance of an access pass to the jobsite. Cranes will also undergo a third party inspection quarterly. All certifications shall be maintained by SPCC and made available to PTTLNG upon request.

Crane operators must be in possession of a valid Thailand's Government license to operate specific machinery. The operator should be trained, experienced and qualified for the operation of that specific make and model of crane. The utilizing SPCC should provide operator experience documentation even if he is using a SPCC on site.

SPCC will employ competent employees that have undergone adequate and recognized training, that have experience and certification to perform their duties.

18 EQUIPMENT AND MOTOR VEHICLES

A. All equipment shall be inspected daily, prior to use, by SPCC's operator.

This document is the property of SPCC who will safeguard its rights according to the civil and penal provisions of the Law.

Formal inspections shall also be made by SPCC's Competent Person at 30-day intervals with proper documentation maintained at the Worksite by SPCC. Copies of inspections shall be made available to PTTLNG upon request.

B. Defective equipment shall be repaired or removed from service immediately.
C. All cracked and broken glass shall be replaced prior to bringing vehicles on the Worksite. If glass is broken or damaged on Worksite, and if damage is severe enough to cause a potential safety problem, the equipment shall be removed from service until such damage has been properly repaired.
D. The view of the operator will not be blocked or obstructed in any way. SPCC will obtain approval from PTTLNG should UV protection film may be fitted to reduce the sun light, sheeting to reduce wind and / or rain disturbance.
E. Vehicles used to transport employees shall have seats firmly secured and have an adequate number of seats and securements (seat belts) for the number of employees to be carried. All passengers shall be properly seated. Standing on moving vehicles shall be prohibited.
F. Locations for storage of all fuels, lubricants, starting fluids, etc., shall be reviewed by PTTLNG prior to use by SPCC for storage.
G. Seatbelts shall be worn by all CONTRACTOR employees operating (or riding in, where allowed) any motor vehicle and any equipment (including cranes and rollers) with rollover protection structures during performance of the work.

19 ELECTRICAL

A. All electrical work, installation, and wire capacities shall be in accordance with the pertinent provisions of the National Electrical Code or equivalent in-country standards.
B. SPCC shall develop and implement a lockout / tagout procedure and strictly adhere to the use of this procedure. PTTLNG shall monitor adherence to the procedure on a regular basis.
C. All temporary power panels shall have covers installed at all times. All open or exposed breaker spaces shall be adequately covered.

20 FLOOR AND WALL OPENINGS AND STAIRWAYS

A. Floor and wall openings shall be guarded by a standard guardrail, mid-rail, and toe-board, or adequately covered.
B. Guardrails shall be of sufficient strength to support 200 pounds (90 kilograms) of pressure when applied at mid-span of the guardrail parallel with the floor and perpendicular to the guardrail with a minimum deflection of 2 inches (50 millimeters).
C. Covers shall be adequately secured to prevent displacement and have "Danger" signs attached identifying the hazard.
D. Every flight of stairs having 4 or more risers shall be equipped with standard stair railings. Stairs shall not to be used until risers and railings are securely installed. Treads shall be poured as soon as possible where poured treads apply.
E. Debris and other loose materials shall not be allowed on stairways or at access point to stairway and shall be immediately removed. Debris shall not be allowed to accumulate in stairwells.
F. SPCC shall be required to replace any floor and wall opening or protective systems removed during the course of their Work.

This document is the property of SPCC who will safeguard its rights according to the civil and penal provisions of the Law.

21 LADDERS

A. All ladders shall comply with Thai law and the requirements as per PTTLNG for Construction.
B. Makeshift wooden ladders and painted wooden ladders shall not be used.
C. Ladders shall be inspected weekly by a competent person.
D. Ladders shall be tagged and with the same tags used for scaffolds.

E. When not secured at the top, ladders will be properly anchored at the base to prevent the footings from slipping and a second person shall hold the ladder firm in place while being used.
F. When ladders are being used for accessing at the same point more than once, it shall be properly secured at the top and extend at least one meter above the landing or work surface.
G. Ladders shall always be supported on the ground or floor but never hung.
H. Ladders shall always be used at an angle of 75%. Ladders shall not be used in a vertical position.
I. SPCC shall develop and maintain a ladder register to track location, use, condition,
inspections and defects.
J. Only non-conductive ladders shall be used when working with or around live / energized systems.

22 EXCAVATIONS AND TRENCHING

A. Prior to opening any excavation or trench, CONTRACTOR shall notify PTTLNG. In addition, CONTRACTOR shall contact any other necessary entities to determine whether underground hazards such as contaminated soil, containers, or equipment, or installations such as sewer, telephone, fuel, electric lines, etc., may be encountered and where they are located.
B. SPCC shall designate a competent person trained in soil classification and the recognition of trenching and excavation hazards.
C. Appropriate documentation to meet the PTTLNG's trenching and excavation standards is to be kept on site.
D. Only hand excavation shall be permitted where confirmation regarding absence of underground facilities cannot be achieved.
E. Excavations and trenches shall be inspected by a competent person daily and after every rainfall to determine if they are safe.
F. All banks 1.2 meters high or more shall be sloped to 34 degrees unless soil is analyzed by a competent person allowing a greater slope angle or shall be adequately shored.
G. Where, given the inherent constraints of the environment, shoring is not possible, the Excavation / Trench may be benched or braced or, be provided for against additional engineered solutions, which shall be reviewed and accepted by the PTTLNG prior to execution.
H. Ladders or steps shall be provided and secured in all trenches 1.2 meters or more in depth. Ladders or steps shall be located to require no more than 7.5 meters of lateral travel before having accessed or egress and shall extend 1.0 meter above the top of the trench bank.
I. Material excavated shall be stored at least one meter from the edge of the

This document is the property of SPCC who will safeguard its rights according to the civil and penal provisions of the Law.

excavation or trench or shall be shored to prevent material from falling into the excavation.

J. All trenches and excavations shall be properly barricaded with a hard physical barricade (not tape or rope) to prevent persons from walking into them.

K. All walkways or ramps crossing over excavations shall be securely fastened and equipped with standard guardrails.

This document is the property of SPCC who will safeguard its rights according to the civil and penal provisions of the Law.

23 STEEL ERECTION

A. SPCC shall adhere to applicable in-country regulations.
B. At no time shall there be more than 3 floors or 12 meters of unfinished bolting or welding above the foundation or uppermost permanently secured floors.
C. A temporary and/or permanent floor shall be maintained within 2 stories or 10 meters, whichever is less, below and directly under that portion of each tier of beams on which any work is being performed.
D. Planking or metal decking in temporary floors shall be of proper strength and thickness to carry the working load. Decking shall be secured to prevent movement.
E. Standard guardrails and toe-boards shall be installed around open sides of permanent floors. During structural steel assembly scaffold tubing shall be used to construct railings to scaffold specifications or, a safety railing (cable) of 12mm diameter shall be installed approximately 1.1 meter high, recessed into interior of floor around all temporary floors.
F. Where fall distance exceeds 1.8 meters, scaffolds, ladders, catch platforms or full body harness, double lanyards and shock absorber attached to lifelines or other substantial objects shall be used. If the use of these is impractical, safety nets shall be provided.
G. Tag lines shall be used to control all loads and Shepherd hooks to retrieve same safely from a reasonable distance from suspended load.
H. Containers shall be provided for storing or carrying bolts or rivets. When bolts, drift-pins, or rivet heads are being removed, a means shall be provided to prevent accidental displacement. Tools shall be provided lanyards (not secured to the wrist) to prevent falling.
I. During the final placing of solid web structural members, the load shall not be released
J. from the hoisting line until the members are secured with not less than 2 bolts or equivalent at each connection.
K. SPCC shall not allow any of employees to walk the steel.
L. A safe means of access to the level being worked shall be maintained.
M. Climbing and sliding columns are not considered safe access and not allowed.

24 CONFINED AREAS OR SPACES

A. CONTRACTORs shall adhere to applicable federal, state, local, and in-country regulations (such as 29 CFR 1926.146).
B. SPCC shall develop an entry procedure, and submit to PTTLNG for review and non-objection, to be used when CONTRACTOR employees are required to enter confined areas or spaces. Such areas include, but are not limited to, storage tanks, process vessels, bins, boilers, ventilation or exhaust ducts, sewers, underground utility vaults, tunnels, pipelines, open-topped pits, basements, and temporary wood framing covered with plastic.
C. All SPCC employees who are required to enter confined areas or spaces shall be instructed as to the nature of hazards involved, necessary precautions to be taken, and the use of required protective and emergency equipment.

This document is the property of SPCC who will safeguard its rights according to the civil and penal provisions of the Law.

D. Prior to SPCC employees being permitted to enter into any confined areas or spaces, the atmosphere within the space shall be tested to determine the oxygen level and concentration of flammable vapors, gases, and toxic contaminants. CONTRACTOR needing access to the confined area shall furnish the testing equipment and a person trained/knowledgeable in the use of the testing equipment.

E. When welding, cutting, or heating in confined areas or spaces, ventilation shall be provided. When sufficient ventilation cannot be provided without blocking the means of access/egress, SPCC employees shall be protected by airline respirators.

F. An employee of SPCC shall be stationed outside the confined area, whenever required, to maintain communication with those working within and to initiate an emergency response in accordance with approved permit or other requirements for the project.

G. Hazardous atmosphere means an atmosphere that may expose employees to the risk of death, incapacitation, impairment of ability to self-rescue, injury, or acute illness from:

- ✓ Flammable gas, vapor, or mist in excess of 10 percent of its lower flammable limit (LFL)
- ✓ Airborne combustible dust at a concentration that meets or exceeds its LFL (which may be defined as a condition in which the dust obscures vision at a distance of 5 feet (1.52 meters) or less
- ✓ Atmospheric oxygen concentration below 19.5 percent or above 23.5 percent
- ✓ Atmospheric condition or concentration of any substance that is immediately dangerous to life or health as published in 29 CFR 1910.146 (Z) or (G), or in-country equivalent, or may be capable of causing one of the above reactions

25 SANITATION

The SPCC will provide an adequate supply of potable water in all its work areas daily and test water supply weekly.

- ✓ Portable containers for drinking water shall be tightly closed, and equipped with a tap. Water shall not be dipped from containers.
- ✓ Drinking water containers shall be clearly labelled as to the nature of its contents, and shall not be used for any other purpose.
- ✓ Drinking water containers shall not be opened in the field by anyone other than employees designated to service and maintain the containers.
- ✓ Non-potable water outlets shall be clearly labeled as being unsafe for drinking, or washing purposes.
- ✓ Portable water containers shall be cleaned weekly, using bleach wash and baking soda rinse.
- ✓ Single use drinking containers shall be provided at each water container.
- ✓ Adequate trash containers shall be provided to dump the single use drinking containers. The use of a common drinking cup will not be permitted. Personnel are not permitted to drink directly from the container.
- ✓ Toilet facilities shall be provided for workers/employees to the ratio of one toilet

This document is the property of SPCC who will safeguard its rights according to the civil and penal provisions of the Law.

per 20 employees.

- ✓ All job site toilet facilities shall be serviced and cleaned with steam, chemicals and detergents at least once daily or more frequently depending on the amount of use.
- ✓ Portable toilets on the project shall be strategically located so as to provide adequate coverage for all active work areas. In multi-story structures, no more than two (2) floors will separate each toilet.
- ✓ SPCC shall provide a dedicated team to maintain, service and keep clean and hygienic all sanitary facilities and otherwise occupied spaces.
- ✓ The frequency of cleaning portable water containers should be more once a week.
- ✓ CONTRACTOR shall be proposed of the portable toilets locations on the SITE to PTTLNG/PMC for review and approval before mobilize into site.

26 LUNCH / BREAK AREAS

Employees shall take breaks and eat lunch in designated areas only. These areas shall be free from hazardous materials or other possible contaminates.

- ✓ Lunch and break areas shall be removed from active work areas where employees would be exposed to ongoing work while eating lunch or taking a break.
- ✓ Lunch and break areas shall be covered (so as to protect against the inherent environmental elements), well ventilated and kept cool and shall meet 100% the capacity of the on-duty / on-site work force.
- ✓ SPCC shall ensure all trash, debris and food residues are cleaned up at the end of the break.
- ✓ Consumption of food shall be prohibited in work areas.
- ✓ The locations and requirement of such facility shall be approved by PTTLNG.

27 HEAT STRESS

A. SPCC shall provide adequate numbers of heat stress shelters or shaded areas for employees to rest to prevent heat stress or heat exhaustion when working in the open work areas.

B. SPCC shall equip the heat stress shelter fans or other means of cooling, normal drinking water and drinking water enriched with minerals and electrolytes.

C. SPCC shall submit to PTTLNG a design for such heat stress shelter for review and approval and a plot plan indicating the location of the shelters.

28 SMOKING

PTTLNG reserves the right to regulate smoking, open fires, carrying matches, and welding permits when and where deemed necessary in the interest of

This document is the property of SPCC who will safeguard its rights according to the civil and penal provisions of the Law.

safety. SPCC shall be responsible for and so enforce SPCC's personnel, the personnel of all subcontractors and visitors to comply with the regulations and restrictions as directed. These smoking, open fires and similar regulations may vary during the progress of construction, or during the testing or initial operation of any portion of the plant. Smoking will not be allowed in any office, building or vehicle on the project. PTTLNG requires that SPCC shall provide degenerated and isolated shelters for smoking and keeping matches and provide fire extinguisher sand bucket and ashtray. CONTRACTOR shall seek the authorization of the PTTLNG for the location where SPCC intends putting these shelters.

29 IONIZING RADIATION

The SPCC shall appoint qualified employee as Radiation Safety Officer. The person shall be responsible for aspects of work involving the storage, the handling, the transportation and the use of ionizing sources on the project and ensure safe work practices and procedures are followed by CONTRACTOR employees and sub-contractors. All ionizing and radioisotope source and x-ray work will be done with the coordination of other project participants working on the project.

SPCC shall ensure all personnel that are occupationally exposed to ionizing radiation, are subject to a regular medical check and continual medical monitoring, a copy of such medical report must be kept on record and made available for inspection to authorities and PTTLNG.

SPCC shall obtain an approved permit from PTTLNG for all work involving ionizing radiation occurring by natural decay of radioisotopes (nuclides) and / or x-rays as produced by electrical means from portable or static equipment. Permits shall be submitted 24 hours in advance for approval with an area plot plan indicating the area the work is to be performed.

SPCC shall inspect prior to the start of ionizing radiation work to ensure :

- ✓ People that are performing the work are licensed and have valid certification recognized by the Thailand's Government.
- ✓ Each person involved in the work has a monitoring film badge and a pocket dosimeter.
- ✓ A survey meter with audible and visual alarms is in the area for radiation area monitoring and shall acquire the source each time.
- ✓ All inspections and certification of equipment are current and complies with applicable Government standards and PTTLNG rules.
- ✓ An accurate accounting system is kept for each source coming onto the project and shall include the serial number, receipt date, decay chart and projector or transit container used.
- ✓ The work areas in which ionizing radiation work is to be performed are barricaded, warning signs and lights posted, perimeter guards posted and all workers removed from the area before the work starts.

This document is the property of SPCC who will safeguard its rights according to the civil and penal provisions of the Law.

- ✓ A safe access and egress are to be provided to the work location with adequate lighting.

SPCC shall obtain proper approval from PTTLNG and Thailand's Government for storage facilities and to store ionizing and radioisotope sources. CONTRACTOR shall comply with all requirements of authorities.

SPCC shall ensure all vehicles transporting ionizing and radioisotope sources onto the project are fitted with yellow revolving lights on rooftop and are marked "NDT Radiography" on both sides and rear end of the vehicle.

30 HEXAVALENT CHROMIUM

A. SPCC shall provide the necessary training to persons performing work (welding of stainless steel) in the hazards of Hexavalent Chromium.
B. SPCC shall apply suitable respiratory protection program, including of pre-medical evaluations (respiratory function tests, blood baselines tests and a full physical), periodic medical evaluations and post project medical evaluations of persons performing such work as described above.
C. SPCC shall make available the appropriate respiratory and full body protection in protecting against the hazards of hexavalent chromium.
D. SPCC shall establish a safe environment for the execution of such work by way of schedule or physical barricade to eliminate impact to persons not directly involved in the work described above.
E. SPCC shall make available a decontamination zone for persons donning and disrobing from garments worn during the execution of the work described above prior to leaving the immediate work area for breaks or at the end of a shift.

31 PAINTING AND BLASTING

A. SPCC will ensure the plant & equipment used by the operators during spray painting and grit blasting operations comply with international standards unless otherwise specified by PTTLNG. Operators shall be properly trained and records made available to PTTLNG on request.
B. Compressors supplying airline respirators shall be tested for grade 'D' air quality (non - contaminated breathing air) before being allowed to operate on the project and every month thereafter thus ensuring persons health is not being put at risk. A record of these tests shall be kept on the project and made available to PTTLNG on request.
C. Compressors shall have filters in the delivery hose to continually remove moisture, oil and particulate. The filters shall be renewed periodically and the date of the renewal will be identified on the outside of the filter. It shall have a carbon monoxide (CO) monitor and alarm between the oil lubricated compressor and the respirator air intake. It shall also be equipped with a 140 degree F. (60 degree C.), high temperature alarm on the air intake of an airline respirator and have a minimum

This document is the property of SPCC who will safeguard its rights according to the civil and penal provisions of the Law.

hood air flow 6.

D. Air receivers providing air to airline respirators shall be constructed in accordance with the 1968 edition of the ASME Boiler and Pressure Vessel Code Section V111. It shall be installed so that all drains, hand- holes and manholes are easily accessible, equipped with an indicating gauge and with one or more spring loaded calibrated safety relief valve.

E. Hoses shall have whip-lash arrestors installed at all joints especially at quick release couplings, and the compressed air reduced to less than 30psig (210kpa) to prevent injuries.

32 LIVE LINES

A. When steam blowing, chemically cleaning, pneumatic testing, hydro- testing or pressure testing pipelines or putting any product into pipelines, SPCC Will ensure people engaged in the work are properly trained in their tasks and the dangers of the work and the safety precautions to be taken. SPCC will ensure an approved permit is obtained from.

B. Barricades shall be placed at a calculated distance or at a minimum 20-meter safe distance around the areas in which such work is being performed and signs posted. Access into the area shall be controlled to allow only the people directly involved in the work. CONTRACTOR shall deploy perimeter guards to control access.

C. All flanges, gaskets and valves shall be checked prior to testing, valves and blinds locked in the correct open or close position, and tested for leaks once the work started and periodically thereafter.

D. SPCC shall ensure an Emergency Response Team near the area consisting at a minimum of an ambulance, first aid people, fire fighters and firefighting equipment and that proper communication channels are established.

33 PERSONAL PROTECTIVE EQUIPMENT

A. PPE, such as gloves, glasses, ear plugs, dust masks etc, shall be observed as a consumable. All required PPE shall be administered by the CONTRACTOR without charge or deduction from wages to the worker. Should cases of negligence be determined by the CONTRACTOR, the CONTRACTOR shall present the case to PTTLNG before action is taken against the worker.

B. FRC – Fire Retardant Clothing within areas classified as Hazardous Zones or as required against the JSA, Long sleeve shirts shall be worn at all times. Sleeveless shirts and tank tops are not permitted.

C. Folding in of the back part as to convert to a slip-on shoe will not be permitted. Sandals, tennis shoes, or any other street type shoe will not be permitted.

D. Loose fitting clothes or jewelry shall not be worn around such things as moving machinery, grinding operations.

E. Approved hard hats meeting specifications contained in ANSI (American National Standards Institute) Z89.1-1981 and/or Z89.2-1971 will be worn at all times when outside offices and vehicles. Hard hats shall also be worn when employees

This document is the property of SPCC who will safeguard its rights according to the civil and penal provisions of the Law.

are engaged in activities requiring goggles, welding hoods and shields and face shields.

F. Safety glasses, complying to international standards (ANSI Z87), with side shields are required in plant and construction areas at all times when outside offices and vehicles. Dark safety glasses may be worn during daytime. Clear or amber glasses must be worn at night or in poor illuminated areas during daytime.

G. Safety nets shall be installed when people are working at elevated levels in structures to contain debris, material and other loose items falling from above to protect people working below. Nets shall be cleaned frequently to prevent fire hazard resulting from debris accumulating.

H. Protective earplugs must be worn when noise levels in working areas exceed specified safety limits of 80dB. CONTRACTOR shall measure the noise levels of each area where noise is present to determine noise levels and each area where the noise level exceeds 8odB shall be posted with warning and ear protection signs. Records of measurements shall be maintained and made available to PTTLNG for review upon request. Double Hearing protection or other means of protecting hearing shall be determined by the JSA and made available by the SPCC should the need arise.

34 SIGNS, SIGNALS, BARRICADES AND LIGHTS

A. Signs, signals and barricades shall be visible at all times where a hazard exists.

B. All streets, roads, highways, and other public thoroughfares, which are closed to traffic, shall be protected by effective barricades on which shall be placed acceptable and highly visible warning signs. Barricades shall be located at the nearest intersecting public highway or street on each side of the blocked section.

C. All floor openings, open trenches and other excavations shall be provided with suitable floor opening covers, barriers, signs and lights to the extent that adequate protection is provided to the public. Obstructions such as material piles and equipment shall be provided with similar warning signs and lights.

D. All barricades and obstructions shall be illuminated by means of warning lights from

E. sunset to sunrise. Materials stored upon or alongside public streets a highways

F. shall be so placed, and the work at all times shall be so conducted as to cause the minimum obstruction and inconvenience to the travelling public.

G. All barricades, signs, lights and other protective devices shall be installed and maintained in conformity with applicable statutory requirements and, where within railroad and highway right-of-way as required by the authority having jurisdiction there over.

H. Adequate safe pedestrian crossings shall be provided over trenches and excavations and constructed to applicable Thailand scaffolding standards with regards to rails and walkway (platform), and be of a strength that meets the load bearing criteria of at least 10 people. These crossings shall be inspected weekly and tagged with the same tagging system used as for scaffold inspections.

This document is the property of SPCC who will safeguard its rights according to the civil and penal provisions of the Law.

35 RIGGING EQUIPMENT

A. All rigging equipment shall be free from defects, in good operating condition and maintained in a safe condition and shall bear the serial number of the manufacturer and the Safe Working Load capacity (SWL) marked on it. All rigging equipment will also be accompanied by the manufacturer's certificate indicating the serial number and capacity.

B. A designated, competent employee of SPCC prior to initial use on the jobsite shall inspect rigging equipment and monthly thereafter to ensure that it is safe. Records shall be kept on jobsite of each of these inspections by SPCC and shall be made available to PTTLNG upon request. Any defective rigging equipment or materials that are observed shall be destroyed or immediately removed from the site.

C. SPCC will ensure all spreader bars have an engineered design and a test certificate for the Safe Working Load capacity (SWL) clearly marked on it. SPCC will keep relevant documentation on record and make it available upon request to PTTLNG.

D. CONTRACTOR shall develop, maintain and apply the use of a Lifting and Rigging gear register, which shall capture, but not be limited to:
   - ✓ Use
   - ✓ Location distributed to
   - ✓ In / Out
   - ✓ Inspections
   - ✓ Defects / Repairs

E. No person shall be employed as a rigger until he has successfully completed the site rigger's certificate training course.

36 POWER TOOLS AND HAND TOOLS

A. All hand and power tools, whether furnished by CONTRACTOR or by CONTRACTOR's employee shall be maintained in a safe condition.

B. SPCC shall not issue nor permit the use of unsafe hand or power tools.

C. Electrical power tools shall 220 Volts, grounded or double insulated with proper assured equipment grounding, or ground fault interrupter circuit protection provided.

D. Pneumatic power tools shall be secured to the hose or whip by some positive means such as tied off with stainless steel wire or clips. Couplings of pneumatic hoses will be properly secured and in addition all pneumatic hoses will be fitted with a whiplash arrestor across couplings.

E. All grinding machines shall conform to applicable PTTLNG requirements. Hand held grinders such as angle grinders, surface requirements. Hand held grinders such as angle grinders, surface grinders, pencil grinders, etc. shall be equipped with a dead-man switch.

F. Cords, leads and hoses shall be kept at least 2.0 meters off the ground or whatever height is necessary to be protected from traffic and prevent tripping hazards.

G. Proper cable management shall be adhered to continuously. Cables may be buried if

This document is the property of SPCC who will safeguard its rights according to the civil and penal provisions of the Law.

insulated within a PVC sleeve and surface markers made available and maintained. All surface markers shall be a part of the weekly inspection program.

37 COMPRESSED GAS CYLINDERS

A. Cylinders shall be kept away from sparks, hot slag and flames or be adequately protected.
B. Cylinders shall not be placed where they can become part of an electrical circuit.
C. Cylinders shall be labeled as to the nature of their contents.
D. Oxygen cylinders in storage shall be separated from fuel gas cylinders or combustible materials a minimum of 6.0 meters, or by a non-combustible barrier at least 2.0 meters high having a fire resistant rating of at least one half hour. Empty cylinders shall be separated as above from full cylinders and stored with like cylinders.
E. No Smoking signs shall be posted at storage areas and signs shall clearly indicate contents of cylinders.
F. Anti-flashback arrestors and check valves shall be installed on all oxygen and acetylene cutting gear. The anti-flashback arrestor shall be installed at the regulator end and the check valve at the cutting torch end of each hose while in operation.
G. When not stored in cradles, compressed gas cylinders shall be secured with chains in an upright position at all times. Gas cylinders in use shall be placed in an upright position in trolleys and secured by chains.
H. When transporting, moving and storing cylinders valve protection caps shall be in place and secured. Cylinders shall only be transported in an upright position and secured to prevent them from falling over.
I. Cylinders shall not be hoisted by magnets or choker slings. Valve protection caps shall not be used for hoisting cylinders. Cylinders may only be hoisted in engineered designed cages/cradles bearing the SWL capacity of the cage/cradle. The cradles/cages must be designed to a safety stress factor of at least five of the maximum load. A competent engineer approved by PTTLNG, must inspect such cages/cradles weekly and certify it safe for use.
J. Domestic gas cylinders shall not be broad into the construction site. Special request to use of domestic gas cylinder at construction site shall be proposed and submitted to PTTLNG/PMC for further approval.

38 SCAFFOLDS

A. All scaffolds will be built/erected and dismantled and used as per the specifications and requirements of Thailand standard unless otherwise specified by PTTLNG.
B. Scaffolding not adaptable to guard rails shall require the use of safety harnesses with the lanyard attached to a secure substantial object.
C. Mobile scaffold casters shall be secured and locked prior to mounting. No Personnel shall be on mobile scaffold when it is being relocated.

This document is the property of SPCC who will safeguard its rights according to the civil and penal provisions of the Law.

D. SPCC's employees working swing stages, boatswain chair, floats, suspended scaffolds, man-lifts, suspended man-baskets and needle beam scaffolds shall wear safety harnesses with double shock absorbing lanyards and with lanyards attached to an independent lifeline.
E. SPCC will ensure all scaffolds are inspected and tagged safe for use prior to the use thereof and weekly thereafter by a competent scaffold inspector. A proper scaffold inspection and tagging system, which is consistent with universally recognized industry standards, shall be utilized and maintained. Unsafe scaffolds will be tagged unsafe and rectified immediately.
F. People using such incomplete scaffolds or scaffolds not specifically declared safe, are violating the 100% fall protection policy and may be removed from the jobsite. Only competent scaffold builders are allowed on unsafe or incomplete scaffolds for the purpose of completing the scaffold, making it safe or the dismantling thereof.
G. Personnel erecting or dismantling scaffolding shall be trained and certified by a qualified trainer before the commencement of the work.

39 TEMPORARY PIPE SUPPORTS

All temporary pipe supports and pipe supports used shall have an engineered design, with a safety stress factor of at least two, safe working load capacity displayed on it and inspected by an engineer prior to use and inspected monthly thereafter. The design of temporary pipe supports and pipe supports will have proper end stops and end footings without any overhang. Lists of each design and type indicating its purpose of use, safe working load capacity and pipe bore shall be submitted to PTTLNG.

40 EQUIPMENT PRESERVATION

SPCC will ensure the equipment is preserved according to the specifications of the manufacturer, people involved in the work are trained and the equipment used for preservation (charging / removal), is inspected and safe for use. SPCC shall ensure regulators are rated for the maximum cylinder pressure, gauges are calibrated, hoses used are of the correct type and hoses used for purging are not metal, fittings and connections are the correct type and pressure relief devices are set at the correct pressure. Gas used for purging is not flammable or toxic, cylinder is charged, cylinder valve is operational and key attached. Equipment to be charged / released shall be visually checked for damage, for flange tightness, leaks or any missing items prior to the introduction of the charging /removal medium. Any missing items, damage or loose connections must be rectified before activities take place. Barricades and signs shall be placed around the area.

41 MONTHLY INSPECTION PROGRAM

All of the following:- fuel driven construction equipment, hand and power tools,

This document is the property of SPCC who will safeguard its rights according to the civil and penal provisions of the Law.

electrical equipment, electrical man-lifts, man-baskets, gas cylinder cradles used for lifting, lifting equipment including slings, spreader bars and shackles, cranes, temporary pipe supports and pipe supports in fabrication shops, hoists, temporary electrical distribution boards, fire extinguishers, welding and cutting equipment, ladders, fall protection devices such as full body harnesses and inertia real fall arrest systems, shall be inspected monthly by competent person of SUBCONTRACTOR which shall provide for report to CONTRACTOR within the third day of each month. All equipment shall bear a color coded sticker or tag with the SPCC's name, own equipment identification/serial number or manufacturer's model or serial number, date of inspection and the signature of the competent person inspecting the equipment. SPCC will provide to issue color code sticker every 3 months. Equipment without a valid inspection by a competent person and valid color-coding shall not be used and removed from the project site.

Sample :

Month	Jan-Feb-Mar	Apr-May-Jun	Jul-Aug-Sep	Oct-Nov-Dec
Color				

Equipment/Item in quarantine

42 DRIVING & TRANSPORTATION

SPCC shall adhere to the PTTLNG's driving procedures, posted signs and specified speed limits in PTTLNG operating areas and within the site environs. In the event that any of the SPCC's personnel do not follow safe driving practices, posted traffic signs and exceed speed limits, the PTTLNG may direct the SPCC to replace such personnel at no additional cost to the PTTLNG.

- ✓ The SPCC shall fully comply with the PTTLNG's Fire & Safety Regulations and SHE Guidelines for CONTRACTORs with respect to all vehicles.
- ✓ The CONTRACTOR shall ensure that all its drivers comply with the Thailand's driving regulations and rules.
- ✓ All SPCC drivers shall undergo a Defensive Driving course on an annual basis and provide the training certification and records to PTTLNG. PTTLNG reserves the right to remove any SPCC / SPCC CONTRACTOR personnel from the Worksite for failing to comply with the Driving Procedure, even in the case of a first violation.
- ✓ All equipment drivers / operators, drivers must only be employed on the Worksite as drivers / operators. No driver / operator are permitted to work in another capacity.
- ✓ SPCC is required to demonstrate the experience, qualifications, certification, and applicable Government license of any person employed as a driver / operator of any mobile equipment or vehicle.
- ✓ Maximum speed limit is 30 kilometers per hour. However, much slower All SPCC's means of ingress and egress routes will be adequately
- ✓ Any ATV's used on the jobsite will be 4 wheeled, not 3 wheeled and only on

This document is the property of SPCC who will safeguard its rights according to the civil and penal provisions of the Law.

approval of PTTLNG.

- ✓ The use of cell phones and two way radios are strictly prohibited while driving a vehicle or operating equipment. Equipment operators and vehicle drivers must stop prior to the use of PTTLNG issued cell phones or two way radios.
- ✓ SPCC shall develop and implement a Man / Machine Interface Program and as far as it is reasonably practicable, ensure that an area is at all times suitably lit and that pedestrians are segregated by hard barricade/ signage and policing from moving vehicles and / or vehicle thoroughfares.

43 OCCUPATIONAL HEALTH

A. Pre-employment medical screening
SPCC shall ensure that all its employees and SPCC SUB-CONTRACTOR's employees engaged in the WORK are declared medically fit for the job and healthy by an Occupational Health Doctor. Any medical diseases or disabilities which may adversely influence the employee's ability to perform his role in the WORK shall be reported to PTTLNG prior to the commencement of the WORK.

B. Medical Welfare of Personnel
SPCC shall at no cost to PTTLNG be responsible for the medical benefits of its own and SPCC SUB-CONTRACTOR's employees. SPCC shall make necessary arrangements for medical consultation, treatment or hospitalization if and when necessary and will arrange suitable insurance coverage for such contingencies.

C. SPCC's simple first aid / medical room, medical facility and first aid station

SPCC is responsible to provide first aid / medical room located at an appropriate location at the SITE within its own camp area. The facility should be manned throughout the working hours and comply with requirement of PTTLNG SHE MANAGEMENT PLAN.

- ✓ SPCC is responsible to build and operate a first aid station ("FAS") within its own construction area manned with medical personnel on a 24 hours a day / 7 days a week basis.
- ✓ SPCC is responsible to provide first aid boxes within its own camp area and construction area.

44 FIRST AID AND INJURY REPORTING REQUIREMENTS

A. Personnel and Supplies

- ✓ SPCC shall ensure the availability of medical personnel for advice and consultation.
- ✓ Prior to commencement of Work, SPCC shall make provisions for prompt medical attention in case of serious injury to its employees.
- ✓ SPCC shall ensure that at least one of SPCC's employees is available at the

This document is the property of SPCC who will safeguard its rights according to the civil and penal provisions of the Law.

Worksite to render first aid for each 15 employees performing Work at the Worksite. The individual(s) must have a valid certificate in first-aid training from the authorities training center, or equivalent in-country source that can be verified by documentary evidence.

- ✓ SPCC shall ensure that first-aid supplies approved by SPCC's consulting physician are easily accessible when required.

SPCC shall provide an adequate number of first-aid kits and supplies approved by the consulting physician. First-aid kits shall be easily accessible and shall be in a weatherproof container with individual sealed packages for each type of item. Contents of the first-aid kits shall be checked by CONTRACTOR for completeness and accuracy prior to being sent out to the Worksite and at least weekly during performance of the Work to ensure the expended items are replaced.

B. Incidents and Medical Procedures

CONTRACTOR shall immediately communicate all incidents (near misses included) to
the PTTLNG SHE Representative, and submit a documented investigation report within 24 hours of notification. All investigation(s) reports and support documentation shall be submitted to the PTTLNG SHE Representative:

- ✓ All SPCC shall participate in the PTTLNG Modified Return-to-Work Program, which shall be based upon project/site management's commitment that temporarily or partially disabled employees, as the result of an occupational injury or illness, can productively return to Work prior to resuming normal job duties.
- ✓ All obvious or potential workers' compensation claims shall be reported to the appropriate insurance carrier within 24 hours of notice to the CONTRACTOR.

45 DISCIPLINARY ACTION

SPCC shall follow the disciplinary action below or SPCC's Disciplinary Action Program if it is deemed more stringent by PTTLNG. However, SPCC may be required to remove an employee from the project site at the request of PTTLNG.

A. Serious SHE Violation

- ✓ A Serious SHE Violation is an infraction of project SHE rules that involves a substantial probability that death, serious physical harm, major equipment damage, major property damage, or Work stoppage could result as a result of the infraction.
- ✓ A SPCC employee who commits a Serious SHE Violation or is in an IDLH situation shall be given a written reprimand by CONTRACTOR and/or

This document is the property of SPCC who will safeguard its rights according to the civil and penal provisions of the Law.

shall be removed from the Worksite and not returned to duty at the Worksite if such violation is determined by PTTLNG in its sole judgment to be a flagrant violation. A documented oral reprimand shall not be issued for this type of safety violation.

- ✓ A second violation categorized as serious shall result in the automatic removal of the employee from the Worksite by CONTRACTOR, provided the second violation occurs within one (1) year of the first.

B. Progressive SHE Violation

- ✓ A Progressive SHE Violation is an infraction of the project SHE rules that occurs when the infraction is not likely to cause death, serious physical harm, major equipment damage, or Work stoppage.

- ✓ A SPCC employee who commits a Progressive SHE Violation shall be given a documented oral reprimand by SPCC. A second Progressive SHE Violation to the same employee requires that the employee be given a written reprimand by CONTRACTOR. The employee shall be removed from the Worksite by CONTRACTOR should the employee be guilty of a third Progressive SHE Violation, provided that the third Progressive SHE Violation occurs within one (1) year of the first. It is not necessary for the Progressive SHE Violations to be identical for the progressive steps of discipline to apply.

46 SHE PENALTIES

SHE is a prime concern and responsibility of PTTLNG and SPCC. PTTLNG's SHE Review Committee will investigate poor safety performance where areas have achieved 80% and below for two consecutive weeks in the Weekly Area Assessments to determine the cause for the poor performance. The committee will also investigate poor safety performance in terms of daily inspection and high incidence of incidents. SPCC will be advised in writing of the committee's findings. Should the Safety Committee determine that continuous poor safety performance is a result of inadequate, poor or insufficient field supervision and/or safety personnel, PTTLNG will instruct SPCC to replace the supervision and/or safety personnel or, provide additional field supervision and/or safety personnel. CONTRACTOR shall adhere to the findings of the committee and provide the replacement or additional field supervision and/or safety personnel within seven days of the written notification. CONTRACTOR may request the Safety Committee in writing to review the need for additional field supervision and/or safety personnel and be relieved from the requirement for additional personnel when CONTRACTOR has achieved consistently above 90% in the Weekly Area Safety Assessments for a minimum period of two months or has implemented programs successfully to prevent poor performance.

This document is the property of SPCC who will safeguard its rights according to the civil and penal provisions of the Law.

47 REQUEST REMOVAL OF CONTRACTOR PERSONNEL

If resolution does not occur, PTTLNG shall notify the SPCC's home office, with a copy to field office, by registered mail, return receipt requested, of PTTLNG's intent to direct the removal of the SPCC's specific Project Management.

48 SAFETY INCENTIVE PROGRAM

SPCC shall participate in the Safety Incentive Program of the PTTLNG for this project, which is designed to achieve competition between CONTRACTORs and to benefit the people. SPCC shall submit SPCC's Safety Incentive Program to PTTLNG for review and approval. SPCC's program must drive safe behaviors and be based on the SHE performance scoring of the weekly area safety assessments of each individual supervisor and his crew's work areas. The scoring for the purposes of the incentive program should also include scoring tabulation for SHE initiatives and leading indicators. The program must be designed to recognize good SHE performance and safe behaviors and monthly awards to best performing supervisor and crews. CONTRACTOR's senior site personnel are required to drive the incentive program and actively participate in the recognition and awards process.

49 SECURITY

A. SPCC shall be responsible for the security of its own facilities including material, vehicles, tools, equipment, and any other possessions of CONTRACTOR. PTTLNG does not assume responsibility for CONTRACTOR's material, equipment, tools, vehicles or facilities on the project.
B. CONTRACTOR will control access at all the gates and entrances to the project Worksite 24 hours a day, 7 days a week. CONTRACTOR and its employees shall apply for access passes for all employees, vehicles and equipment to enter the project site.
C. SPCC and it's SUBCONTRACTOR shall complete the project application forms completely and correctly and submit all supporting documentation to the SPCC SHE team via their designated representative for review and processing.
D. After processing CONTRACTOR's completed documentation, SPCC SHE team will issue numbered, ID badges to SPCC employees once they have received safety indoctrination, security induction and other required training. Vehicles and equipment will only be issued access passes after completing and submitting access applications and passing all safety and legal requirements which includes an inspection of the vehicle.
E. SPCC will charge to replace any lost ID badges of SPCC's employee and per ID badge for each week per ID badge not returned upon employees demobilization or termination from the project.
F. SPCC shall ensure access passes and ID badges are properly displayed and visible at all times and present it to CONTRACTOR Security at the access gates and site entrances or upon instruction.

This document is the property of SPCC who will safeguard its rights according to the civil and penal provisions of the Law.

G. SPCC shall organize the standard form of material gate passes and have them approved and presented at PTTLNG's Security gates for all material and equipment entering or exiting the gates.

SPCC and SUBCONTRACTOR shall obtain from SPCC a visitor's pass for each visitor who wishing to visit the SITE.

A. SPCC shall immediately notify PTTLNG of all thefts or other security violations at the jobsite or project. CONTRACTOR shall also submit to PTTLNG a monthly summary of thefts or other security violations.

B. No firearms, dangerous weapons or any item deemed illegal under Thailand's Law are allowed on the jobsite.

C. Only PTTLNG approved cell phones will be permitted on the site. No cell phones with built-in cameras are permitted.Use of photographic equipment inside the project or photographing any part of the project, security personnel or post is strictly forbidden without specific approval of PTTLNG. No photographic or any other imaging devices will be allowed on the project without proper approval of the PTTLNG. Any unauthorized imaging devices found will be confiscated and the proper authorities notified.

50 PROTECTION OF WORKERS, THE PUBLIC, ASSETS AND ENVIRONMENT

SPCC shall protect the safety and health of workers and people living or working near the activity from potential hazards and risks carried out by that activity. SPCC, without cost to PTTLNG, shall take all necessary precautions and mitigation measures to protect the workers and the public and minimize disturbance and inconvenience to the public resulting from performance of the WORKS.

Throughout performance of WORKS, SPCC shall execute the WORKS and conduct all operations in such a way as to minimize any impact upon the natural environment, including compliance with all LAWS, PERMITS, and rules applicable to the WORKSITE, e.g. ENVIRONMENTAL MANAGEMENT PLAN, Environmental Impact Assessment (EIA), EIA approval conditions and authorities etc.

SPCC shall agree to indemnify PTTLNG and consultants of PTTLNG for all claims, damage costs and penalties relating to any environmental damage or loss or non-compliance with any LAWS or PERMITS arising out of SPCC and/or SPCC SUB-CONTRACTOR performance of WORKS.

51 ATTACHMENT

More details of related SHE procedures are wrapped in attachment here for all personnel reference.

Att. no.	Page no.	Title of SHE procedure
Attachment 2	pp.62 ~ pp.66	Dust control procedure
Attachment 3	pp.67 ~ pp.105	Fall prevention & protection program
Attachment 4	pp.106 ~ pp.115	Fire prevention in construction procedure
Attachment 5	pp.116 ~ pp.133	Gas cylinders storage, transportation & use procedure

This document is the property of SPCC who will safeguard its rights according to the civil and penal provisions of the Law.

Attachment 6	pp.134 ~ pp.141	Grinding works procedure
Attachment 7	pp.142~pp.156	Handling radioactive source procedure
Attachment 8	pp.157~pp.167	Heat stress prevention procedure
Attachment 9	pp.168~pp.174	Housekeeping procedure
Attachment 10	pp.175~pp.181	Hydro testing procedure
Attachment 12	pp.190~pp.220	Leading indicator system
Attachment 13	pp.221~pp.226	Lighting for construction works
Attachment 14	pp.227~pp.249	Manual handling procedure
Attachment 15	pp.250~pp.259	Marine works procedure
Attachment 16	pp.260~pp.267	Noise
Attachment 17	pp.268~pp.272	Painting works
Attachment 18	pp.273~pp.286	Pneumatic test
Attachment 19	pp.287~pp.300	Safe transportation
Attachment 20	pp.301~pp.306	Site preparation
Attachment 21	pp.307~pp.318	Warning signs
Attachment 22	pp.319~pp.330	Welding operations
The below		

1	SHE Training Procedure
2	Environmental Procedure
3	PPE Management Procedure
4	Confined Space Procedure
5	Crane, Rigging and lifting, Scaffolding, Excavations work safe
6	Hazardous Chemicals and Substance Procedure
7	Emergency Preparedness and Response Procedure
8	Hand Tools and Machinery Safety Procedure
9	Work Permit Program
10	SHE audit and inspection management Procedure
11	Incident/accident investigation and notification Procedure
12	Simultaneous Operation Procedure
13	SHE Action Tracking System Procedure
14	SHE risk management and JSEA procedure
16	SHE Manual for Construction
17	KPI and SHE Performance Monitoring and Reporting procedure
18	Alcohol & Drug testing procedure
19	SHE Manual and procedures for Commissioning and Start Up
20	SHE Pre Start-Up Audit Procedure

This document is the property of SPCC who will safeguard its rights according to the civil and penal provisions of the Law.

PTTLNG Nong Fab LNG Receiving Terminal Project

SHE PROCEDURES
(DUST CONTROL)

Doc. Class Z

This document is the property of SPCC who will safeguard its rights according to the civil and penal provisions of the Law.

Revision list:

Rev. Nr	Modifications:
R1	First Issue

TABLE OF CONTENTS

1 PURPOSE 64

2 REFERENCE DOCUMENTS 64

3 RESPONSIBILITIES 64

4 INTRODUCTION 64

5 DESCRIPTION OF SAFETY PRECAUTION 65

5.1 GENERAL 65

5.2 ACTION 65

5.3 MONITORING ACTIVITIES 65

This document is the property of SPCC who will safeguard its rights according to the civil and penal provisions of the Law.

1 PURPOSE

The purpose of this procedure is to outline the hazards associated with airborne dust particles and the preventive measures to be taken to reduce risk to health & neighbouring equipment during the construction of the Project.

This procedure covers areas where the work is being carried out and includes consideration for surrounding land areas.

2 REFERENCE DOCUMENTS

- STD-COR-HSE-016
- STD-COR-HSE-005

3 RESPONSIBILITIES

Contractor and subcontractors:

- The Project Manager for Construction is responsible to ensure the adherence of this procedure.
- All the Sub Contractors Project Managers shall follow this procedure for assigning the competent person to monitor the dust activites in site.
- supervision when planning the work shall take into account the anticipated dust levels that personnel under their control may be exposed to;
- where any concerns exist supervision shall consult with the SHE department and arrange an analysis to take place;
- shall provide adequate and suitable respiratory protection for the work being performed reorganising dust hazards and factors for different types of respiratory protection.

The Contractor Field SHE Manager

- shall advise on procurement of respiratory protection;
- shall carry out dust control assessments as often as required to ensure employees' health;
- shall ensure adequate supply of respiratory protection is on site;
- shall ensure that adequate respiratory training is available and provided for the work force.

4 INTRODUCTION

Dust is defined as very small particles of dirt, sand, rock or other airborne particles, which can be inhaled into the lungs of workers.

This document is the property of SPCC who will safeguard its rights according to the civil and penal provisions of the Law.

5 DESCRIPTION OF SAFETY PRECAUTION

5.1 GENERAL

The phenomena of dust-induced ailment and disease only recently has been understood.

The causation factors of working in areas featuring high dust levels are now clearly understood and the long term consequences created from working in such high risk environments have forced companies placing greater level of care on employees.

The physiological damage of working in environments where high levels of dust exist can be simply explained by the damage caused to the lungs, this may result in a host of respiratory diseases, heart disease and pulmonary ailments.

5.2 ACTION

The action point is to keep the airborne dust particles to a minimum.

This includes watering of roads as often as necessary on site.

Screening grit blasting areas to contain particles from this operation.

Provide adequate respiratory protection for each different activity to include general dust/sand storms which are common in this area.

Ensure pulmonary function test for all personnel who are required to wear any respirator other than a simple dust mask.

Dirt should not be dumped or worked in an area where dust will settle on equipment and machinery in neighbouring locations.

Dirt should be wet down as it is being unloaded and when being worked.

5.3 MONITORING ACTIVITIES

In order to properly manage the dust generation at construction sites, it may be necessary, while performing critical activities (refer to the activities risk assessments), to defined and implement a specific and suitable monitoring program.

A monitoring program may help determine the need of further dust reduction actions and assess their effectiveness in preventing and reducing the dust generation.

Measures can be carried out for spot checks or long term monitoring, regarding PM10, PM2.5, or respirable size fractions (referring to those dust particles that are small enough to penetrate the nose and upper respiratory system and deep into the lungs).

This document is the property of SPCC who will safeguard its rights according to the civil and penal provisions of the Law.

Moreover, it is recommended to plan and carry out monitoring activities where convenient, feasible and practical.

Regarding monitoring locations, the following criteria, as far as practicable, should be followed:

- The monitoring should be performed at the site boundary or such locations close to the major dust emission source;
- The monitoring location should be close to the sensitive receptors, if any;
- The selection of the monitoring location should take into account the prevailing meteorological conditions.

In order to measure occupational dust concentrations for workers performing critical activities, stationary and/or personal dust monitoring devices capable of recording time series fluctuations of dust concentrations may be applied.

Monitoring results shall be recorded and filed by FSHEM.

This document is the property of SPCC who will safeguard its rights according to the civil and penal provisions of the Law.

PTTLNG Nong Fab LNG Receiving Terminal Project

SHE PROCEDURES
(FALL PREVENTION & PROTECTION PROGRAMM)

Doc. Class Z

Revision list:

Rev. Nr	Modifications:
R1	First Issue

TABLE OF CONTENTS

1 PURPOSE 70

2 REFERENCE DOCUMENTS 70

3 ROLES / RESPONSIBILITIES 70

4 DEFINITIONS 71

5 DESCRIPTION OF SAFETY PRECAUTIONS 77

6 SCAFFOLDING / TEMPORARY WORK PLATFORMS 77

7 GUARDRAIL SYSTEM 78

8 LADDERS 78

9 COVERS 80

10 WARNING LINES 80

11 PERSONNEL RESTRAINT SYSTEMS 82

12 SECONDARY FALL PROTECTION SYSTEM 82

13 FULL BODY HARNESS / SHOCK ABSORBING LANYARDS 82

14 ANCHORAGE POINTS 83

15 POSITIONING DEVICE SYSTEMS 84

16 LIFELINE SYSTEMS 85

17 SAFETY NET SYSTEMS 87

18 CONNECTORS TOGGLES 87

This document is the property of SPCC who will safeguard its rights according to the civil and penal provisions of the Law.

19 CONCRETE FORM ANCHORAGE POINTS 88

20 REINFORCEMENT STEEL / CONCRETE FORM WORK 88

21 STRUCTURAL STEEL ERECTION 88

22 PERSONNEL LIFT / HOISTING DEVICE 89

23 ROOFING 89

24 EXCAVATIONS 90

25 DANGEROUS EQUIPMENT APPLICATION 90

26 TRAINING 91

27 RETRAINING 92

28 FALL PREVENTION / PROTECTION TRAINING PROGRAM 93

This document is the property of SPCC who will safeguard its rights according to the civil and penal provisions of the Law.

1 PURPOSE

To establish minimum requirements and guidelines to provide maximum prevention/protection against falls from elevation and a minimum standard of training necessary to ensure personnel understanding and compliance with the program. The goal is to achieve 100% fall prevention/protection for all personnel exposed to potential falls moreover the purpose of this procedure is extends to all areas of the project where any working at height activities are to be performed by Contractor, Subcontractor, Vendor and Client.

2 REFERENCE DOCUMENTS

- STD-COR.HSE-016
- STD-COR-HSE-005
- CR-COR-HSE-047
- CR-COR-HSE-048
- CR-COR-HSE-049
- CR-COR-HSE-050

3 ROLES / RESPONSIBILITIES

- Contractor Project Manager Construction (PM-C)

The PM-C will have the responsibility to ensure that this procedure is fully implemented at the site and that all the precautions are in place when ever persons are working at height.

- Contractor Construction manager (CM)

The CM will have the responsibility to comply with this procedure when ever works at height are performed.

- Contractor Field SHE Manager (FSHEM)

The FSHEM will have the responsibility to assist the PM-C and CM for the implementation of this procedure and reporting to them any violation for necessary corrective action.

Moreover will ensure that necessary training will be in place in order to ensure that site persons will have the informations about the requirement for the implementation of this procedure.

- Contractor Discipline Superintendends (DS)

This document is the property of SPCC who will safeguard its rights according to the civil and penal provisions of the Law.

The DS will have responsibility to ensure that all activities on site where persons are exposed to fall, comply with this procedure. Moreover will have to ensure that subcontractors are aware of this procedure before to start any work at height.

- Subcontractor Site Manager (SSM)

The SSM will have the responsibility to ensure that his person follow this procedure and ensure that the required person will attend the specific training of fall prevention, before they start to work at height.

- Subcontractor Construction Manager (SCM)

The SCM will have the responsibility to ensure that all work to be done at height will be done following this procedure.

- Subcontractor Field SHE Manager (SFSHEM)

The SFSHEM will have the responsibility to ensure that persons working at height will attend the required training for working at height and will assist the SSM and SCm for the implementation of this procedure.

4 DEFINITIONS

ANCHORAGE - A secure point of attachment for lifelines, lanyards, or deceleration devices.

BUCKLE - Any device for holding the full body harness closed around the employees body.

CONNECTOR - A device that is used to couple (connect) parts of the personal fall arrest system and positioning device systems together. It may be an independent component of the system, such as a caribiner, or it may be an integral component of the system (such as a buckle or D-ring sewn into a full body harness, or a snap hook spliced or sewn to a lanyard or retractable lifeline).

DANGEROUS EQUIPMENT - Equipment (such as pickling or galvanizing tanks, degreasing units, machinery, electrical equipment, and other units) that, as a result of form or function, may be hazardous to employees who fall onto or into such equipment.

DECELERATION DEVICE - Any mechanism, such as a rope grab, rip-stitch lanyard, specially woven lanyard, tearing or deforming lanyard, automatic self-retracting lifelines, etc., that serves to dissipate a substantial amount of energy during a fall arrest, or otherwise limit the energy imposed on an employee during fall arrest.

DECELERATION DISTANCE - The additional vertical distance a falling employee travels, excluding the lifeline elongation and free fall distance, before stopping, from the point at which the deceleration device begins to operate. It is measured as the distance between the location of an employees full body harness attachment point (D-ring) at the moment of activation (at the onset of fall arrest forces) of the

This document is the property of SPCC who will safeguard its rights according to the civil and penal provisions of the Law.

deceleration device during a fall, and the location of that attachment point after the employee comes to a full stop.

FAILURE - Load refusal, breakage, or separation of component parts. Load refusal is the point where the ultimate strength is exceeded.

FREEFALL - The act of falling before a personal fall protection system begins to apply force to arrest the fall.

FREEFALL DISTANCE - The vertical displacement of the fall protection attachment point on the employee's full body harness between onset of the fall and just before the system begins to apply force to arrest the fall. This distance excludes

deceleration distance, and lifeline/lanyard elongation, but includes any deceleration device slide distance or self-retracting lifeline/lanyard extension before they operate and fall arrest forces occur.

FULL BODY HARNESS - Straps that may be secured about the employee in a manner that will distribute the fall arrest forces over at least the thighs, pelvis, waist, chest and shoulders with means for attaching it to other components of a personal fall arrest system.



The above picture is meant to be a sample. Project to identify the correct type for the specific use.

DOUBLE LANYARD - A flexible lines of wire ropes or nylon straps that generally has a connector at each end for connecting a full body harness to a deceleration device, lifeline, or anchorage.

This document is the property of SPCC who will safeguard its rights according to the civil and penal provisions of the Law.



The above picture is meant to be a sample. Project to identify the correct type for the specific use.

GUARDRAIL SYSTEM - A barrier erected to prevent employees from falling to lower levels.







The above pictures are meant to be samples. Project to identify the correct type for the specific use.

HOLE - A gap or void two inches (2") or more in its least dimension in a floor, roof, or other walking/working surface.

This document is the property of SPCC who will safeguard its rights according to the civil and penal provisions of the Law.

LEADING EDGE - The edge of a floor, roof, or form work for a floor or other walking/working surface (such as a deck) that changes location as additional floor, roof, decking, or form work sections are placed, formed or constructed. A leading edge is considered to be an "unprotected side and edge" during periods when it is not actively and continuously under construction.

LIFELINE - A component consisting of a flexible line for connection to an anchorage at one end to hang vertically (vertical lifeline), or for connection to anchorages at both ends to stretch horizontally (horizontal lifeline), and that serves as a means for connecting other components of a personal fall protection system to the anchorage.

Life lines has be installed based on approved and designed methodology.

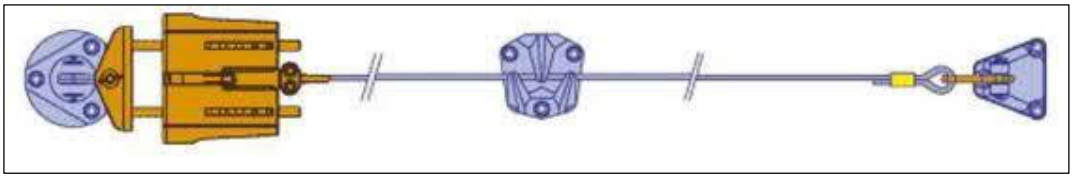

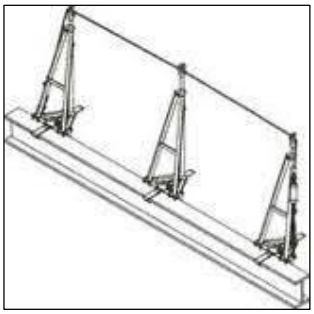

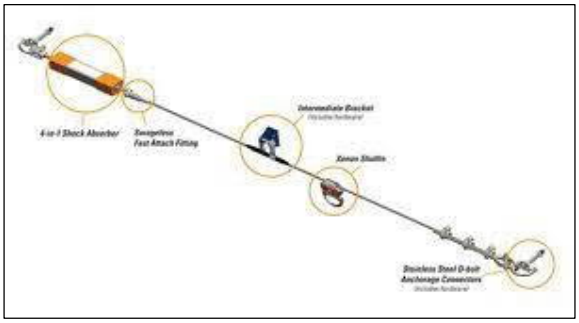

The above pictures are meant to be samples. Project to identify the correct type for the specific use.

LOW SLOPE ROOF - A roof having a slope less than or equal to 4 in 12 (vertical to horizontal).

LOWER LEVELS - Those areas or surfaces to which an employee can fall. Such areas or surfaces include, but are not limited to, ground levels, floors, platforms, ramps, runways, excavations, pits, tanks, material, water, equipment, structures, or portions thereof.

MECHANICAL EQUIPMENT - All motor or human propelled wheeled equipment used for roofing work, except wheelbarrows and mopcarts.

OPENING - A gap or void thirty inches (95 cm) or more high and eighteen inches (55 cm) or more wide, in a wall or partition, through which employees can fall to a lower level.

This document is the property of SPCC who will safeguard its rights according to the civil and penal provisions of the Law.

PERSONAL FALL PROTECTION SYSTEM - A system used to arrest an employee in a fall from a working level. It consists of anchorage, connectors, a full body harness, a shock absorbing lanyard and may include a deceleration device, lifeline, or suitable combinations of these.

POSITIONING DEVICE SYSTEM - A body belt or body harness system rigged to allow an employee to be supported on an elevated vertical surface, such as a wall, and work with both hands free while leaning. These system must prevent fall potential of greater than 1 meter and be supported with a secured personal fall protection system.

PRIMARY FALL PREVENTION - Elimination of fall exposures through use of guardrail systems, aerial lifts, scaffolds or alternate work methods such as pre assembly at ground level.

ROOF - The exterior surface on the top of a building. This does not include floors or form work that, because a building has not been completed, temporarily becomes the top surface of a building.

ROOFING WORK - The hoisting, storage, application and removal of roofing materials and equipment including related insulation, sheet metal, and vapor barrier work, but not including the construction of the roof deck.

ROPE GRAB - A deceleration device that travels on a lifeline and automatically, by friction, engages the lifeline and locks so as to arrest the fall of an employee. A rope grab usually employs the principle of inertial locking cam/level locking, or both.



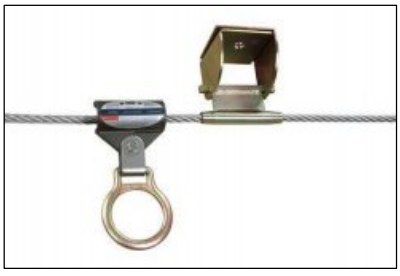

The above pictures are meant to be samples. Project to identify the correct type for the specific use.

SECONDARY FALL PROTECTION - Utilization of fall arrest equipment as a backup to primary fall prevention systems or in the absence of primary fall prevention systems.

SELF RETRACTING LIFELINE/LANYARD - A deceleration device containing drum wound line that can be slowly extracted from or retracted onto the drum under slight

This document is the property of SPCC who will safeguard its rights according to the civil and penal provisions of the Law.

tension during normal employee movement, and that, after onset of a fall, automatically locks the drum and arrests the fall.

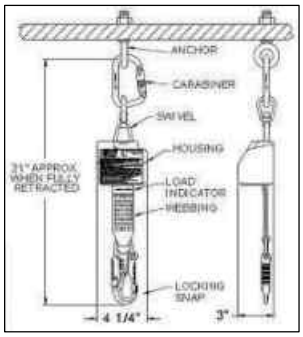





The above pictures are meant to be samples. Project to identify the correct type for the specific use.

SNAPHOOK - A connector comprised of a hook-shaped member with a normally closed keeper, o' similar arrangement, that may be opened to permit the hook to receive an object and, when released, automatically closes to retain the object. The locking type with a self-closing keeper that remains closes to and locked until unlocked and pressed open for connection is the only authorized snaphook. Non locking snaphooks are expressly forbidden for fall prevention/protection purposes.

STEEP ROOF - A roof having a slope greater than 4 in 12 (vertical to horizontal).

TOEBOARD - A low protective barrier (minimum of 10 cm in vertical height from their top edge to the walking/working surface and no more than 1 cm clearance above the walking/working surface), that will prevent the fall of materials and equipment to lower levels and provide protection from falls to personnel.

UNPROTECTED SIDES AND EDGES - Any side or edge (except entrances to points of access) of a walking/working surface, e.g., floor, ramp, or runway where there is no wall or guardrail system at least 1 meter high.

WALKING/WORKING SURFACE - Any surface, whether vertical or horizontal on which an employee walks or works, including, but not limited to, floors, roofs, ramps, bridges, runways, form work and concrete reinforcing steel but not including ladders, vehicles, or trailers, on which employees must be located to perform their duties.

WARNING LINE SYSTEM - A barrier erected on a low pitch roof, to warn employees that they are approaching an unprotected side or edge, and that designates an area in which roofing work may take place without the use of a guardrail, full body harness, or safety net systems to protect employees within that enclosed area.

This document is the property of SPCC who will safeguard its rights according to the civil and penal provisions of the Law.

WORK AREA - The portion of a walking/working surface where job duties are being performed.

5 DESCRIPTION OF SAFETY PRECAUTIONS

- Primary fall prevention systems are the preferred choice for performing work in elevated areas. These systems provide walking and working surfaces that are free from floor/wall openings and are equipped with standard guardrail systems on all open sides. In most cases, primary fall prevention systems are sufficient fall prevention methods in themselves and do not require the use of additional (secondary) fall protection systems such as harness/lanyard systems.
- Secondary fall protection systems should only be utilized after all efforts to employ primary fall prevention systems have been exhausted or when being used in concert with primary systems.

6 SCAFFOLDING / TEMPORARY WORK PLATFORMS

Every effort shall be made to ensure all temporary platforms/walkways are equipped with solid decking free of openings and standards guard rail systems.

- Personnel working or traveling on temporary elevated platforms shall wear an approved full body harness with double lanyard system at all times.
- Personnel working/traveling on temporary platforms with fall exposure shall secure their lanyards to an anchorage point capable of supporting 5,000 pounds force (2267,96 Kg force) or designed as part of a complete personal fall arrest system that maintains a safety factor of at least two (2).
- Personnel working/traveling on complete temporary platforms, free from deck openings, and equipped with standard guardrails are not required to secure their lanyards if they remain within the confines of the temporary platform and guardrail system. Lanyard to be secured when will be exposed to fall.

- All temporary platforms shall meet engineering and manufactures specifications, prior to any employee usage of the platform.
- Temporary work platforms shall be inspected dally by Designated Competent Persons prior to use by any personnel. A tag shall be placed on the platform to readily identify the platform as inspected and safe for use.
- Every temporary work platform shall be provided with a safe means of access/egress. Retractable lifelines shall be used while ascending or descending access ladders to temporary work, platforms or walkways with a fall hazard greater than 4 meters or the rope grab method.

This document is the property of SPCC who will safeguard its rights according to the civil and penal provisions of the Law.

7 GUARDRAIL SYSTEM

Guardrail systems are an integral part of many primary fall prevention systems and whenever used, must be constructed with absolute certainty of integrity and structural soundness. Guardrail systems must meet the following minimum requirements:

- Top rail must be 90-110 cm above the walking/working surface.
- Midrails must be installed at a height midway between the top edge of the guardrail system and the walking/working level.
- Guardrail systems shall be capable of withstanding, without failure, a force of at least 100 kg applied within 5 cm of the top edge, in any outward or downward direction at any point along the top edge.
- When a 100 kg load is applied to the top handrail, it shall not deflect to a height less than 1 meter above the walking/working level.
- Midrails must be capable of withstanding, without failure, a force of at least 70 kg applied in any downward or outward direction at any point along the midrail.
- If wire rope is used for top rails, it must be flagged at not more than 2 meter intervals with high visibility material.

8 LADDERS

- Permanent caged ladders being used to access complete structures where no fall exposure exists, may be ascended/descended without wearing a safety harness/lanyard.
- Temporary construction ladders shall extend at least 1 meter above the upper landing being accessed and be secured against displacement.
- Temporary construction ladders and portable ladders (e.g., extension ladders, step ladders, etc.) placed for repeated access/egress to elevations with a fall hazard greater than 4 meters shall be equipped with retractable lifelines or rope grab system. Personnel ascending or descending these ladders shall secure the retractable lifeline to their safety harness prior to ladder use.
- One time access/egress on a portable ladder does not require the use of a retractable lifeline. The following procedure shall be used when a retractable lifeline is not required.

o Personnel preparing to perform a new work activity must receive specific training concerning the use of portable ladders and associated fall protection techniques.

o Personnel ascending ladders that are not yet secured at the top must have another employee hold the ladder at the bottom until it can be properly secured. This also includes the last trip down after untying the ladder at the top.

This document is the property of SPCC who will safeguard its rights according to the civil and penal provisions of the Law.

o Upon reaching the elevation where the work is to be performed, the employee shall secure their shock absorbing lanyard prior to proceeding with the task. The ladder should then be properly secured and the task may begin. When the task is completed, this process should be reversed with the shock absorbing lanyard being the last protective device to be released prior to descent

o Absolutely no objects, tools, or materials are to be carried in hands while ascending/descending ladders.

This document is the property of SPCC who will safeguard its rights according to the civil and penal provisions of the Law.

9 COVERS

Covers for holes in floors, roofs, and other walking/working surfaces shall meet the following requirements:

- Covers located in roadways and vehicular aisles shall be capable of supporting, without failure, at least twice the maximum axle load of the largest vehicle or piece of equipment expected to cross over the cover.
- All other covers shall be capable of supporting, without failure, at least twice the weight of employees, equipment, and materials that may be imposed on the cover at any one time. Cover to be approved by concerned department (Construction and SHE) before to be used. Scaffolding board or steel plate to be used for hole cover. Playwood or other type of material is not to be used.
- All covers shall be secured when installed to prevent accidental displacement by the wind, equipment, or employees.
- All covers shall be marked with the words "HOLE COVER - DO NOT REMOVE" to provide adequate warning of the hazard.
- Only authorized personnel shall be permitted to remove hole covers.
- Prior to removing covers, the area shall be barricaded to prevent employees from accidentally stepping through an opening.
- For short duration tasks (single shift), barricade tape may be used to warn employees provided the opening is attended by a monitor at all times. The monitor shall have no other duties.
- Barricade tape shall be erected a minimum distance of 2 meters from the opening.

10 WARNING LINES

Warning line systems are designed to be utilized while performing work on low-slope roofs. The warning line allows employees to readily note when they are approaching an unprotected roof edge.





1. The warning line shall be erected around all open sides of the roof work area.

This document is the property of SPCC who will safeguard its rights according to the civil and penal provisions of the Law.

a. When mechanical equipment is not being used, the warning line shall be erected not less than 2 meters from the roof edge

b. When mechanical equipment is being used, the warning line shall be erected not less than six 2 meters from the roof edge that is parallel to the direction of mechanical equipment operation, and not less than 3 meters from the roof edge that is perpendicular to the direction of mechanical equipment operation.

c. Points of access, material handling areas, storage areas, and hoisting areas shall be attached to the work area by an access path formed by two (2) warning lines.

d. When the path to a point of access is not in use, a rope, wire, chain, or other barricade, equivalent in strength and height to the warning line system, shall be placed across the path at the point where the path intersects the warning line system placed around the work area, or the path shall be offset such that an employee cannot walk directly into the work area.

2. Warning lines shall consist of rope or wire cables, and supporting stanchions erected as follows:

a. The rope or wire cable shall be flagged at not more than 2 meter intervals with high visibility material.

b. The rope or wire cable shall be rigged and supported in such a way that it's lowest point (including sag) is no less than 90 cm from the walking/working surface and it's highest point is no more than 1 meter from the walking/working surface.

c. After being erected, with the rope or wire cable attached, stanchions shall be capable of resisting, without tipping over, a force of at least 8 kg applied horizontally against the stanchion, 80 cm above the walking/working surface, perpendicular to the warning line, and in the direction of the floor, roof, or platform edge.

d. The rope or wire cable shall have a minimum tensile strength of 220 kg, and after being attached to the stanchions, shall be capable of supporting, without failure, the loads applied to the stanchions as prescribed in Step 2.c above.

e. The line shall be attached at each stanchion in such a way that pulling on one section of the line between stanchions will not result in slack being taken up in adjacent sections before the stanchion tips over.

3. Personnel working outside the protection of a warning line system shall be protected by either a personal fall protection system or a safety net system at all times when there is a fall potential of six feet (ó') or more. A warning line system DOES NOT allow workers to be unprotected from potential fall exposures.

This document is the property of SPCC who will safeguard its rights according to the civil and penal provisions of the Law.

11 PERSONNEL RESTRAINT SYSTEMS

Restraint systems are designed to restrain movement so that a fall is not possible. The system must have the capacity to withstand at least 3,000 pounds force (1360.77 KG force), or twice the maximum expected force that is needed to restrain the person from exposure to the fall hazard. In determining this force, consideration should be given to site specific factors such as, but not limited to, the force generated by a person walking, leaning, or even sliding down a steep roof.

12 SECONDARY FALL PROTECTION SYSTEM

These systems must be worn and used in the absence of Primary Fall Prevention Systems.

13 FULL BODY HARNESS / SHOCK ABSORBING LANYARDS

1. A full body harness and 2 shock absorbing lanyard system shall be worn and secured where there is a fall exposure of 2 meter or more. In all working on height the 100% tie-off shall be guaranteed.

2. If the work is located on a permanent structure and no fall potential is created by the work or by the condition of the structure, full body harnesses are not required.

3. If the work is located on a complete scaffold where no fall potential is created by the work or the condition of the scaffold, full body harnesses shall be worn but tie off is not required.

4. When accessing a complete permanent structure by climbing a permanent caged ladder, a full body harness is not required.

NOTE: If at any time an employee is forced to reach, or position any part of their body beyond the plane of the structure's boundaries (i.e., guardrail system), full body harnesses shall be worn and secured to ensure 100% fall protection.

5. To ensure the integrity of the equipment being used and success of the Fall Prevention/Protection Program, the following shall be strictly adhered to:

a. **Only full body harnesses/shock absorbing lanyard systems approved by Contractor may be used on any project.** Personal safety harnesses/lanyard systems are strictly forbidden.

b. Lanyards must be of the shock absorbing type when used for fall protection.

c. Shock absorbing lanyards shall only be used for fall protection and are never to be used for positioning or material transport.

This document is the property of SPCC who will safeguard its rights according to the civil and penal provisions of the Law.

d. The shock absorbing lanyard shall be secured to the D-ring located on the back of the harness between the shoulder blades

e. The shock absorbing or deceleration device shall be secured adjacent to the harness D-ring.

f. D-rings located at the waist may only be used for positioning or with rail-type ladder climbing devices.

g. D-rings located on the front of the harness shall only be used for attachment to rail mounted ladder climbing devices.

h. Full body harnesses/shock absorbing lanyards shall be attached to an anchorage point capable of supporting an impact load of 5,000 pounds (2267 Kg-Force) or twice the potential impact load of the engineered fall protection system.

i. Full body harnesses and shock absorbing lanyards shall be secured to limit potential freefall distance to 2 meters or less.

j. Snaphooks attached to shock absorbing lanyards shall be of the double action/locking type design. Simple spring resistant snaphooks shall not be used for fall protection.

k. Employees using a full body harness and shock absorbing lanyards shall inspect them for wear, damage and other deterioration prior to each use.

l. All full body harnesses and shock absorbing lanyards shall be inspected at least monthly by a Designated Competent Person(s) and subsequently color coded or tagged to indicate a current inspection.

m. Defective full body harnesses and shock absorbing lanyards shall be tagged "DEFECTIVE - DO NOT USE" and immediately removed from service.

n. Full body harnesses and shock absorbing lanyards subjected to impact loading shall be immediately removed from service and shall not be used again for employee protection until inspected and determined by a Competent Person to be undamaged and suitable for reuse

14 ANCHORAGE POINTS

The strength of a personnel fall arrest system is based on its being attached to an anchorage system that does not reduce the strength of the system. The following equipment and structure will not meet the requirements of the OSHA fall protection standard and shall NOT be used for anchorage points.

- Screw Pipe
- Conduit

This document is the property of SPCC who will safeguard its rights according to the civil and penal provisions of the Law.

- Cable Tray (use requires engineering approval)
- Welded Pipe Less Than 5 cm
- Wooden Handrails

15 POSITIONING DEVICE SYSTEMS

Work positioning systems are sometimes required for specialized tasks such as installing vertical rebar walls. Personnel using positioning systems must adhere to the following minimum guidelines.

Personal positioning bells will only be allowed after they have been inspected and found acceptable by the onsite safety representative, A method for readily identifying inspected belts must be developed by the project site to ensure all positioning belts in use have been approved.

Positioning belts of any kind shall not be used as fall protection systems at any time.

Work positioning lanyards are to be attached to D-rings at the waist belt location and be supported by an appropriate work belt/harness. Positioning lanyards shall not be of the shock absorbing type and shall not be used for fall protection.

The positioning type lanyard shall limit fall potential to 1 meter or less.

The positioning lanyard must always be backed up by a properly secured shock absorbing fall protection lanyard or retractable lifeline reel.

While ascending or descending vertical rebar walls, 100% fall protection shall be maintained by utilizing the shock absorbing double lanyard system or retractable lifeline reels.

Snap hooks on positioning lanyards shall be of the double action/locking type design. Simple spring resistant hooks shall not be used.

Employees using positioning belts/harnesses and lanyards shall inspect them for wear, damage and other deterioration prior to each use.

All positioning belts/harnesses and lanyards shall be inspected at least monthly by a Designated Competent Persons(s) and subsequently color coded or tagged to indicate a current inspection,

Defective positioning belts/harnesses and lanyards shall be tagged "DEFECTIVE - DO NOT USE" and immediately removed from service.

Positioning devices shall be secured to an anchorage capable of supporting at least twice the potential impact load of an employee's fall or 3,000 pounds, whichever is greater.

This document is the property of SPCC who will safeguard its rights according to the civil and penal provisions of the Law.

16 LIFELINE SYSTEMS

Lifeline systems are points of attachment for fall protection lanyards and harnesses. Lifelines may be mounted either vertically or horizontally and provide fall protection for personnel working in elevated areas.

Lifelines shall not be used for any other purpose than fall protection.

Lifelines shall be protected against being cut or abraded (i.e., Softeners around lifelines at anchorage point).

Lifelines shall be inspected, by a Competent Person(s) at least weekly to ensure system and equipment integrity. The project shall develop a method to readily identify that the lifeline has been inspected and is fit for use prior to beginning any work involving the lifeline system.

- LIFELINE PLACEMENT/INSTALLATION

Use the engineered systems included in this procedure or the project will be required to design and engineer a system for their particular needs. Approved engineered drawings must be kept on file at the project. See Paragraph BB for detailed engineered drawings and technical specifications.

Lifelines must be installed and used under the supervision of a designated qualified person. Only designated qualified persons that have been approved by the project manager/superintendent and safety representative will be allowed to supervise the installation. Written documentation on personnel qualified to supervise the installation of lifelines shall be kept on file at the project.

Before the installation of life-line, a dedicated design and engineering system has to be provided, a long with calculation, in order to ensure the requirement of this procedure. (Anchorage breaking strength 5000 pound, etc)

- HORIZONTAL LIFELINES

Systems must be designed and engineered to maintain a safety factor of at least two (2).

Use the engineered systems included in this procedure or the project will be required to design and engineer a system for their particular needs. This must be done under the approval of a professional engineer. Approved engineered drawings must be kept on file at the project.

Lifelines shall be installed, removed, and used under the supervision of a designated qualified person(s).

Written documentation on personnel qualified to supervise the installation of lifelines will be kept on file at the project.

This document is the property of SPCC who will safeguard its rights according to the civil and penal provisions of the Law.

- VERTICAL LIFELINES

Must have a minimum breaking strength of at least 5000 pounds.

Use the engineered systems included in this procedure (refer to Paragraph CC) or the project will be required to design and engineer a system for their particular needs. Approved engineered drawings must be kept on file at the project.

Only designated qualified persons that have been approved by the project manager/ superintendent and safety representative will be allowed to supervise installation.

Written documentation on personnel qualified to supervise the installation of lifelines will be kept on file at the project.

- RETRACTABLE LIFELINE SYSTEM

Retractable lifelines are devices that when properly used, will serve to stop the free fall of an employee prior to the employee striking a lower surface.

Retractable lifeline devices shall be attached to an anchorage point capable of supporting 5,000 pounds or designed and installed as part of a fall arrest system that maintains a safety factor of two (2).

Retractable lifelines shall be secured by, as a minimum 1 cm wire rope chokers or slings and 1 cm shackles. The slings and shackles designated for fall protection shall only be used for fall protection purposes and should be color coded "RED" to readily identify them for that purpose. ROPE (synthetic or natural fiber) SHALL NOT BE USED TO SECURE THESE DEVICES.

All slings, chokers, and shackles shall be inspected, by a Competent Person(s), at least monthly. The monthly color code scheme should be placed on the equipment to identify it as inspected and available for use.

Each retractable lifeline device shall be equipped with a rope tag line for extending the device to elevations below the point of attachment.

Retractable lifelines shall be placed above every temporary construction ladder that is to be used for repeated access/egress and exposes employees to a fall hazard greater than twelve feet (12'). The retractable device shall be attached in such a manner that it does not interfere with the employee who is using the ladder for access or egress.

Retractable lifelines shall be used to provide a fall protection system for structural iron workers during erection, prior to installation of other fall prevention/protection systems.

Retractable lifeline systems shall be inspected, by a Competent Person, at least monthly. The monthly color code scheme shall be placed on the equipment to

This document is the property of SPCC who will safeguard its rights according to the civil and penal provisions of the Law.

identify it as inspected and fit for continued use.

Retractable lifelines devices shall only be installed by employees specifically trained and Designated Competent for that task.

Retractable lifeline shall be attached directly to the foll body harness. Attachment to a shock absorbing lanyard is not acceptable.

17 SAFETY NET SYSTEMS

Safety net systems may be used as a secondary fall protection method when it is found to be unfeasible or impossible to use other forms of secondary fall protection. The nets shall be installed only by the Structural/Rigging Department or their designee and installation shall be supervised by a designated, qualified person.

Safety net systems shall be installed according to engineered drawings and specifications, particular to that tasks needs.

Engineered drawings shall be kept on file at the project.

Safety nets shall be placed as close as practical under the working/walking surface on which employees are working, but in no case more than 10 meters below such level.

Safety nets shall be installed with sufficient clearance under them to prevent contact with the structures or surface below.

Safety nets shall be drop tested per 29 CFR 1 926,S02 (C) (4) (1) after initial installation, after relocation, after major repairs, and at six-month intervals if left in one place. Drop test records must be kept on file at the project.

Defective nets shall not be used. Safety nets shall be inspected at least weekly to ensure integrity. Safety nets shall also be inspected after any occurrence that could affect the integrity of the safety net system.

Materials, scrap pieces, equipment, and tools that have fallen into the safety net shall be removed as soon as possible from the net and at least prior to the next workshift.

18 CONNECTORS TOGGLES

Those devices lock into structural steel bolt holes to provide an anchorage point for a shock absorbing lanyard. These devices are to be used by structural iron connectors and bolt up personnel during steel erection.

This document is the property of SPCC who will safeguard its rights according to the civil and penal provisions of the Law.

Connectors toggles shall be able to withstand 5000 pounds impact load or twice the potential impact load of an engineered fall protection system.

19 CONCRETE FORM ANCHORAGE POINTS

These devices attach to patented concrete forms to provide an attachment point for a shock absorbing lanyard. They are to be used when placing concrete forms at elevations where a fall exposure exists.

Concrete form anchorage points shall be able to withstand 5000 pounds impact load or twice the potential impact load of an engineered fall protection system.

20 REINFORCEMENT STEEL / CONCRETE FORM WORK

Personnel working on rebar walls, piers, and on concrete form walls must have fall protection 100% of the time they are exposed to a potential fall. This fall protection can be achieved by using one of the following options.

- Double lanyard system
- Retractable lifelines
- Manlifts

Personnel working rebar or formed walls and elevated piers generally require the use of work positioning belt and lanyard. The positioning belt/lanyard shall be used in conjunction with a harness/lanyard that has been properly secured to provide fall protection.

On vertical rebar walls, the safety lanyard shall be secured overhead to either a lifeline or a horizontal section of rebar.

On form walls, personnel shall use patented construction form tie-off attachments or lifelines to secure their safety lanyards. These persons shall receive SATA on the equipment and fall protection practices that will be used.

21 STRUCTURAL STEEL ERECTION

Personnel erecting skeletal steel structures shall maintain 100% fall prevention/protection through the use of personal fall protection systems, retractable lifelines, connectors toggles, and aerial lifts (JLG, Snorkel, etc.)

Access to structural steel shall be obtained by use of ladders, aerial lifts, or other approved personnel hoisting devices. Climbing of structural steel members such as columns and diagonal braces is expressly forbidden.

This document is the property of SPCC who will safeguard its rights according to the civil and penal provisions of the Law.

Prior to and during lifeline system placement, personnel shall crawl (coon) steel members with shock absorbing lanyards secured around said steel members. Retractable lifeline systems secured at elevations above the operation may be used in some situations.

When lanyard lengths longer than 2 meter, are required to reach around large steel members the Project Safety Representative or Site Manager/Superintendent shall be contacted for approval.

22 PERSONNEL LIFT / HOISTING DEVICE

- Aerial Lifts (JLG, Scissors, Snorkel, Etc.)

Personnel riding in or working from these lifts must secure their safety lanyard to the lift basket at all times.

- Spyders and Ski-Climbers

Personnel riding in or working from these hoisting devices shall each be provided an independent lifeline and rope grab. The employee's lanyard shall be connected to the rope grab at all times while aloft. The anchorage point for the lifeline must be independent of any anchorage being used to support or suspend the platform.

- Crane Hoisted Personnel Baskets

Use of these devices shall comply with the safety procedures in the Contractor’s Procedures Manual. Personnel riding in or working from personnel baskets must secure their lanyard to the basket or an overhead attachment point at all times while aloft.

23 ROOFING

- Low Slope Roof Applications

Employees engaged in work activities on low slopes roofs, with unprotected sides and edges six 2 meter or more above a lower level, shall be provided 100% fall prevention/protection by utilizing guardrail systems, personal fall protection systems, safety net systems, or warning lines.

When warning line systems are used, the line shall be placed at least 2 meter away from any unprotected side or edge, except when mechanical equipment is being used a minimum of ten 3 meter is required. Any employee working between the roof edge and warning line must be protected by a personal fall protection system.

- High Slope Roof Applications

This document is the property of SPCC who will safeguard its rights according to the civil and penal provisions of the Law.

Employees engaged in work activities on high slope roofs, with unprotected sides and edges six feet (ó') or more above a lower level shall be provided 100% fall prevention/protection by guardrail systems, personal fall protection systems, safety net systems, or lifeline systems.

Guardrail systems must meet engineered drawing and technical specifications.

Personal fall protection systems must remain secured at all times while the fall exposure of six feet (ó') or more is present.

Employees shall receive training and tool-box talks prior to beginning any task located on a high slope roof.

24 EXCAVATIONS

Excavations with straight cut sides and changes in elevation of 2 meter or more, shall be provided with fall prevention/protection devices adequate to protect personnel working or traveling adjacent to them. The preferred method for safeguarding this fall exposure is with rigid guardrail systems immediately adjacent to the excavation. Where personnel are required to work immediately adjacent to the excavation and guardrail systems do not provide adequate protection, employees shall be provided fall restraint and/or lifeline systems to which they can secure their safety lanyard/harness.

Employees shall remain secured to a lifeline or restraint system when working within 2 meter of an excavation with unprotected sides or edges.

Lifeline systems and employee restraint systems shall meet engineered drawing and technical specification prior to use.

25 DANGEROUS EQUIPMENT APPLICATION

Each employee less than 2 meters above dangerous equipment shall be protected from falling into or onto dangerous equipment by guardrail systems or by equipment guards.

Each employee 2 meter or more above dangerous equipment shall be protected from fall potential by guardrail systems, secured personal fall protection systems, safety net systems, or employee restraint systems.

Lifeline and restraint systems shall meet engineered drawing and technical specifications prior to use.

This document is the property of SPCC who will safeguard its rights according to the civil and penal provisions of the Law.

26 TRAINING

Projects shall provide specific training for each employee that has the potential to be exposed to a fall hazard.

Employees that have the potential to be exposed to a fall hazard shall be trained prior to starting work.

Training must be conducted by a competent person designated by the project manager / superintendent and site safety representative.

As a minimum training shall include the following:

1. Fall Prevention Training Program.
2. Any fall protection equipment, procedures, or hazards unique to the project that are not included in the Fall Prevention Training Program.
3. Practical training for the use of full body harness with double lan yard in a working platform.



This document is the property of SPCC who will safeguard its rights according to the civil and penal provisions of the Law.

Sample of practical training

4. Training must be documented with a written certification record and entered into the Training System.

- Certification records must include the following information:

  1. Title and summary of the training.

  2. The identity of the employee(s) trained (name, signature and social security number).

  3. Date and location of the training (project name, number, and location).

  4. Name and signature of the competent person that conducted the training.

- Personnel performing the training shall be designated in writing with documentation being maintained by the project HSE representative.

- Personnel performing the training must be qualified in the following areas:

  1. The nature of fall hazards in the work area.

  2. The correct procedures for erecting, maintaining, disassembling, and inspecting the fall protection~ system to be used.

  3. The use and operation of guardrail systems, personal fall protection systems, safety net systems, warning line systems, and other protection to be utilized.

  4. The limitations on the use of mechanical equipment during the performance of roofing work on low sloped roofs.

  5. The correct procedures for the handling and storage of equipment and materials and the erection of overhead protection.

27 RETRAINING

Retraining in fall protection must be conducted anytime there is a reason to believe that an employee does not have the necessary knowledge and skills to comply with

the Fall Protection/Prevention Program.

Retraining must be conducted by a Designated Competent Person.

- Retraining is required under the following circumstances:

  1. Changes in the workplace render previous training obsolete.

This document is the property of SPCC who will safeguard its rights according to the civil and penal provisions of the Law.

2. Changes in the types of fall protection system or equipment to be used renders previous training obsolete

3. Observations of inadequacies in an affected employees knowledge or use of fall protection systems/equipment indicate that the employee has not retained the requisite understanding or skill.

4. Employee infractions of the Fall Prevention/Protection Program must be documented and the employee retrained in the applicable area of the program violated.

5. Retraining must be documented with a written certification record and entered into the Training System (same requirements as for initial training).

28 FALL PREVENTION / PROTECTION TRAINING PROGRAM

1. INTRODUCTION

- Falls are the leading cause of work related death in the construction industry.
- Falls account for 40,000 to 75,000 work related injuries and 80 to 100 fatalities annually.
- OSHA Fall Protection Standard.

2. RECOGNITION OF POTENTIAL FALL HAZARDS

- Unprotected Sides and Edges
- Platforms
- Walkways and ramps
- Floor Openings
- Wall Openings
- Pipe Racks and Skeletal Steel
- Scaffolds
- Ladders
- Extensions
- Step

This document is the property of SPCC who will safeguard its rights according to the civil and penal provisions of the Law.

- Roofs
- Vertical Walls
- Reinforcing steel work
- Concrete form installation
- Excavations
- Pits, Shafts and Manholes
- Equipment (crane booms, maintenance, etc.)

3. OVERVIEW OF WRITTEN PROCEDURE

Be sure to add any project specific procedures, equipment, or hazards that are not included in the Procedure. Emphasis should be placed on elimination of the exposure first and utilization of fall protection equipment as a last resort.

4. HANDS ON DEMO OF EQUIPMENT

Set up a mock work area where the instructor can demonstrate and employees can practice hands on use of equipment. As a minimum, the demo shall include the following items.

- Harness and Lanyard

Teach and demonstrate proper donning procedure (per manufacturers guideline).

o Proper fit

o Proper positioning

-Demonstrate correct use and storage of lanyards.

o Secure overhead to limit fall potential to a maximum of six feet (6')

o Minimize swing fall hazard by securing lanyard directly overhead.

o Allow adequate clearance to prevent striking objects below (shock absorber will elongate upon activation).

o Never snap two (2) lanyards together for extra length.

o Never tie knots in a lanyard.

o Steel lanyard required for welders.

This document is the property of SPCC who will safeguard its rights according to the civil and penal provisions of the Law.

- Shock absorber end must be secured adjacent to harness.
- Never hook shock absorbing lanyards to a retractable reel.
- Store lanyards rolled up out of the way to eliminate a trip or snag hazard.

-Explain and demonstrate proper use of "D"-Rings.

- Front "D"-Ring must only be utilized for attachment to rail mounted ladder climbing devices.
- Side "D"-Rings are designed only for positioning.
- Back "D"-Ring located between the shoulders must be used to attach shock absorbing lanyard to the harness. (Also to be used for direct hook up to retractable lifelines.)

-Review manufacturers recommended inspection procedure (by user before each use).

- Faulty latches or snaps
- Cuts and abrasions
- Burns
- Dry rot:
- Chemical damage
- Excessive wear
- Loose or torn stitches

-Movement and access in elevated areas.

- Always tie-off before accessing work areas where a fall exposure exists.
- Two (2) lanyards will be required to provide continuous tie-off while climbing through pipe racks or structures.
- Tie-off to approved anchorage points (refer to written procedure).
- IF FALL PROTECTION TIE-OFF IS NOT AVAILABLE, DO NOT ACCESS THE AREA!
- ALWAYS connect the second lanyard before unfastening the first lanyard when traveling in elevated areas.

This document is the property of SPCC who will safeguard its rights according to the civil and penal provisions of the Law.

Explain and demonstrate use of anchorage devices such as straps, connector toggles, etc.

Retractable Lifelines

-Daily inspection prior to use.

- Check housing for dents or signs of abuse.
- Check cable for kinks, bird caging, unlaying, broken wires, heat damage and excessive wear.
- Pull on cable and make sure it moves smoothly.
- Give the cable a quick pull to ensure the brake is engaging properly.
- Check snap hooks for sign of alterations, distortions, cracks, dents or cuts.
- Check pressed metal sleeves on cable for cracks or excessive wear.
- Check anchorage for proper connections.

-Proper care of unit.

- Never drop the unit from any height.
- Protect the cable from sharp corners and edges.
- Don't allow foreign matter to enter the housing.
- NEVER permit the cable to re-reel uncontrollably back into the device.
- Do not leave cable extended for prolonged periods of time.
- Do not stretch welding leads or electrical cords across the cable.

-Demonstrate and review proper use of unit.

- Snap hook shall be secured directly to the back "D"-Ring. (Do NOT use safety lanyard for attachment to retractable lifeline.)
- Swing fall must be minimized. Never install the unit where the cable will make an angle of greatest than thirty degrees (30O) with vertical.
- Allow a minimum clearance of 1.2 meter in the event of a fall.
- Do not work with cable at full extension (at least 1 meter must remain on the device).

This document is the property of SPCC who will safeguard its rights according to the civil and penal provisions of the Law.

- Cable should not pass over sharp corners.
- Only designed for one (1) person at a time (75-300 Ibs.)
- Never to be used as a work positioning device.
- Do NOT allow cable to pass under arms, between legs, or wrap around any part of the body.
- Do NOT climb above the anchorage point.
- To arrest a fall, the unit must be inspected by a Competent Person prior to being put back in service.

This document is the property of SPCC who will safeguard its rights according to the civil and penal provisions of the Law.

- "BB"

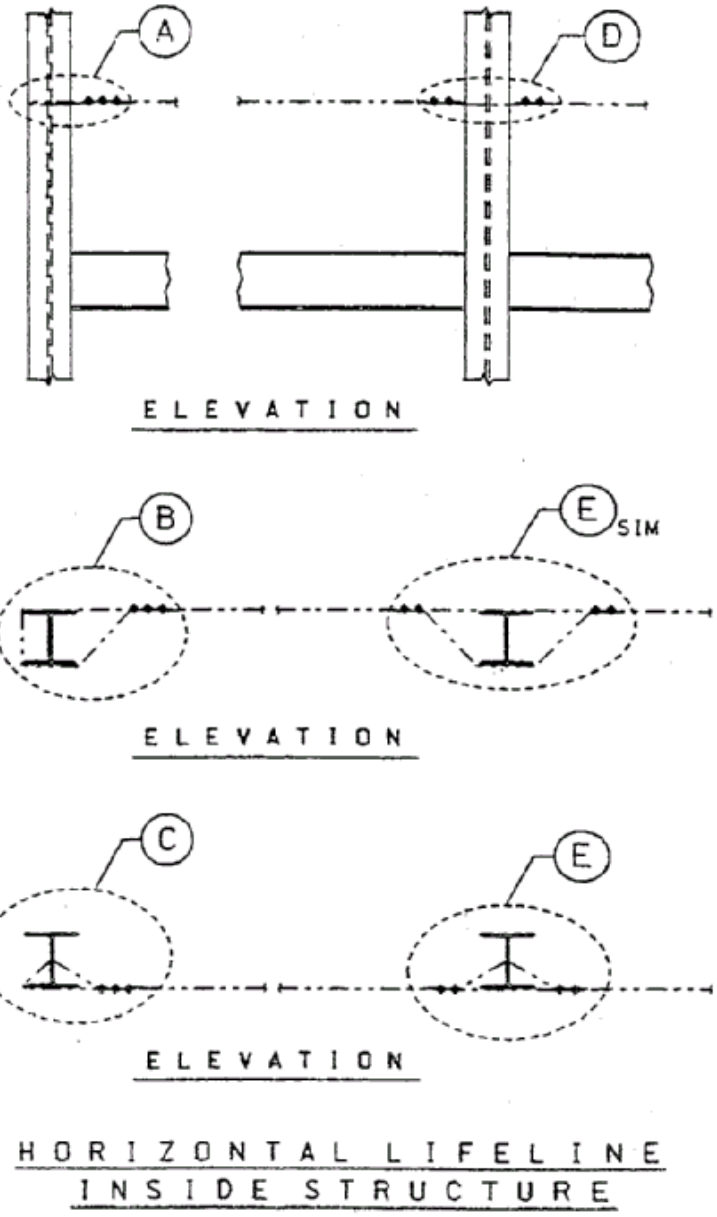

This document is the property of SPCC who will safeguard its rights according to the civil and penal provisions of the Law.

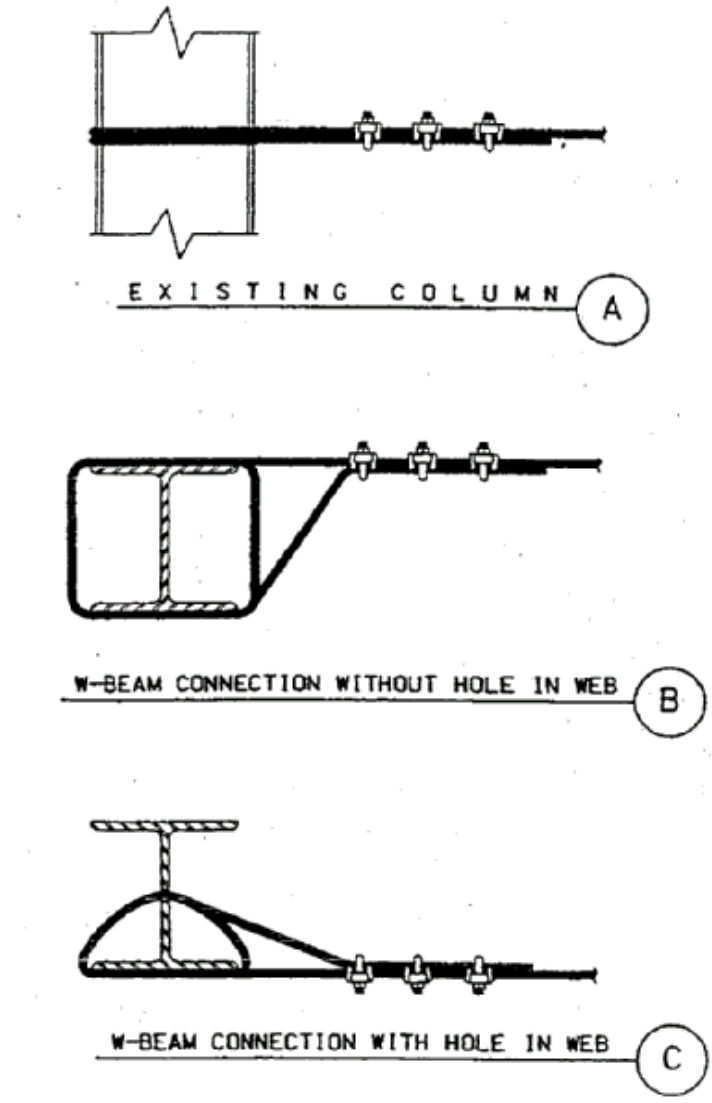

INSIDE STRUCTURE HORIZONTAL LIFELINE
END ANCHORAGE

This document is the property of SPCC who will safeguard its rights according to the civil and penal provisions of the Law.

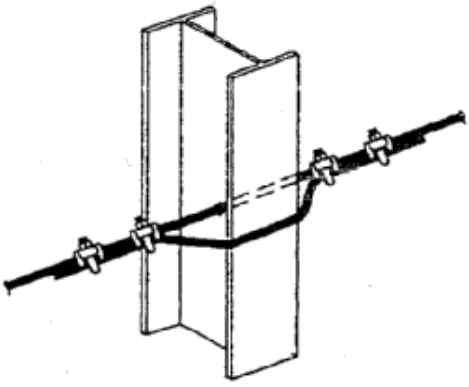

COLUMN WITH HOLE INSIDE WEB (D)

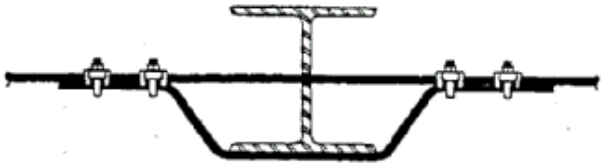

W-BEAM WITH HOLE INSIDE WEB (E)

INSIDE STRUCTURE HORIZONTAL LIFELINE
INTERMEDIATE ANCHORAGE - EVERY 40 FEET

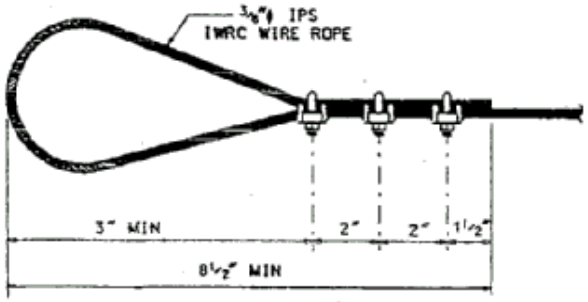

END ANCHORAGE

HORIZONTAL LIFELINE DETAILS

This document is the property of SPCC who will safeguard its rights according to the civil and penal provisions of the Law.

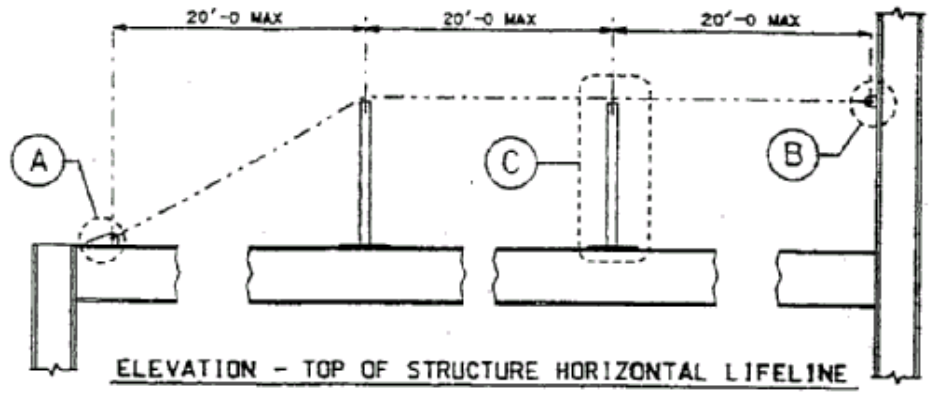

ELEVATION - TOP OF STRUCTURE HORIZONTAL LIFELINE

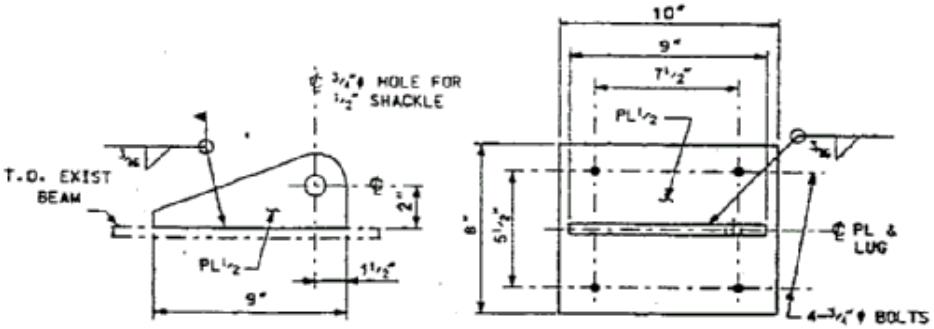

FIELD WELDED LUG

PLAN - BOLTED ALTERNATIVE

HORIZONTAL LIFELINE ANCHORAGE LUG (A)

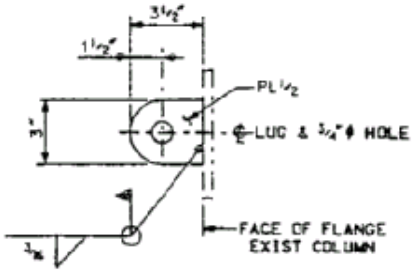

HORIZONTAL LIFELINE ANCHORAGE LUG (B)

This document is the property of SPCC who will safeguard its rights according to the civil and penal provisions of the Law.

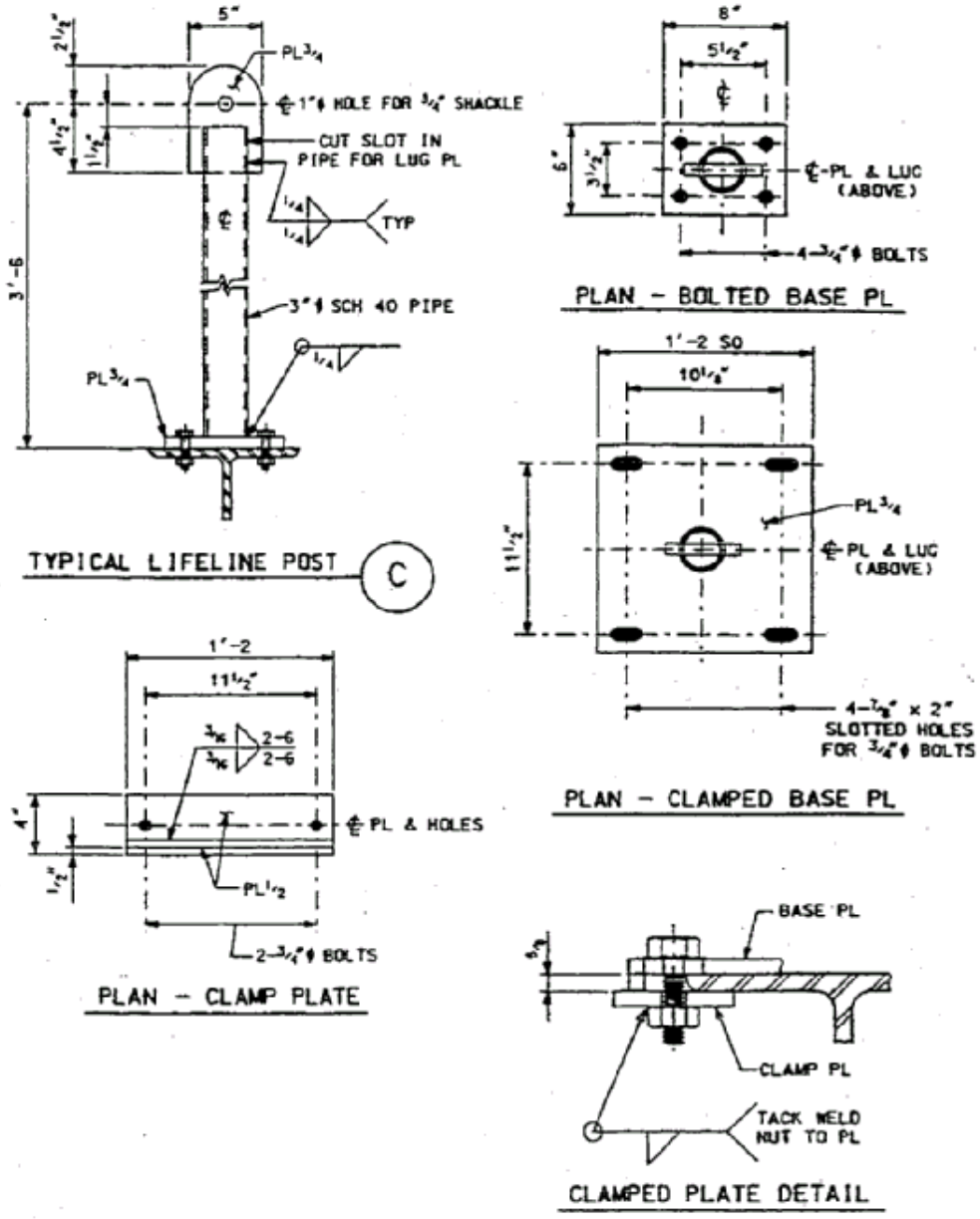

HORIZONTAL LIFELINE DETAILS

This document is the property of SPCC who will safeguard its rights according to the civil and penal provisions of the Law.

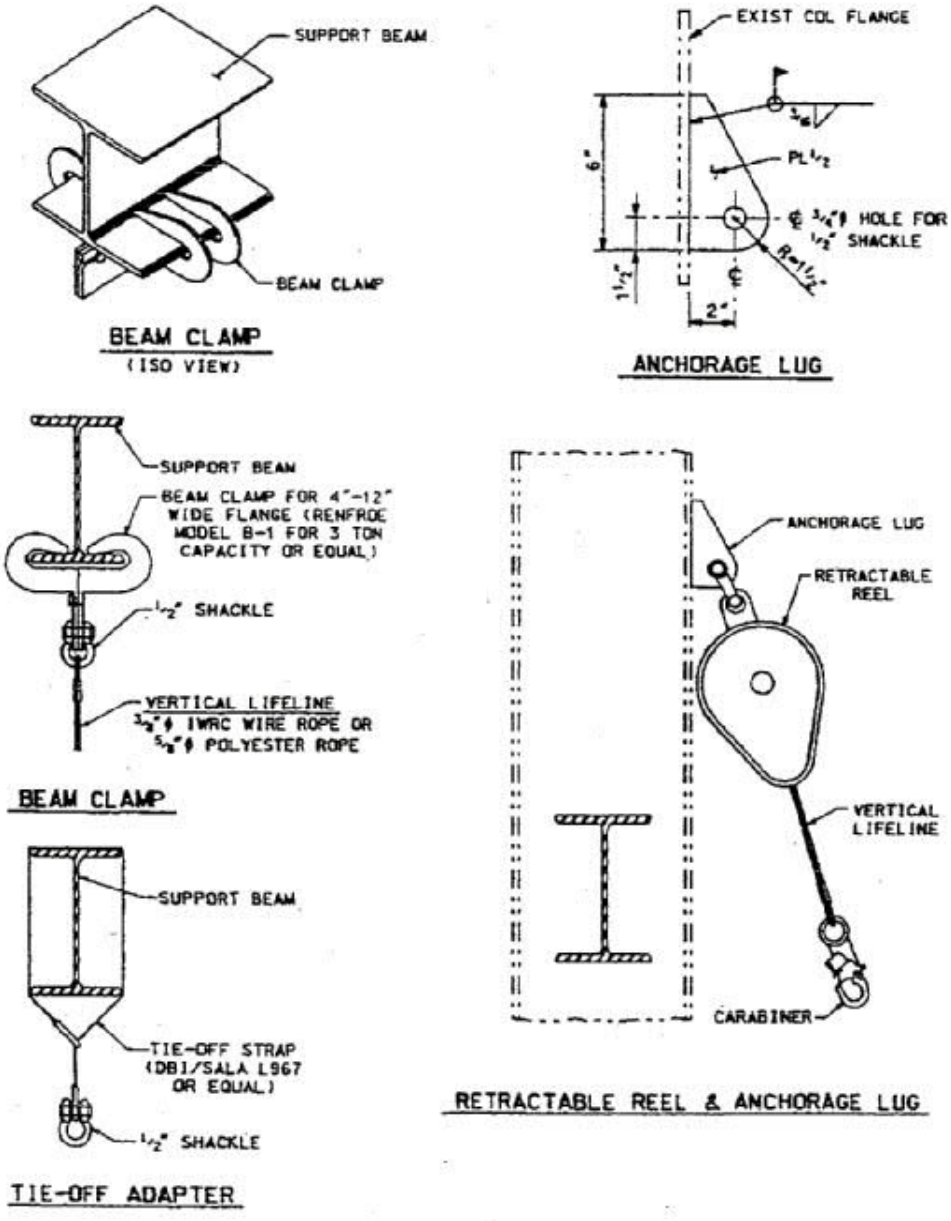

VERTICAL LIFELINE DETAILS

This document is the property of SPCC who will safeguard its rights according to the civil and penal provisions of the Law.

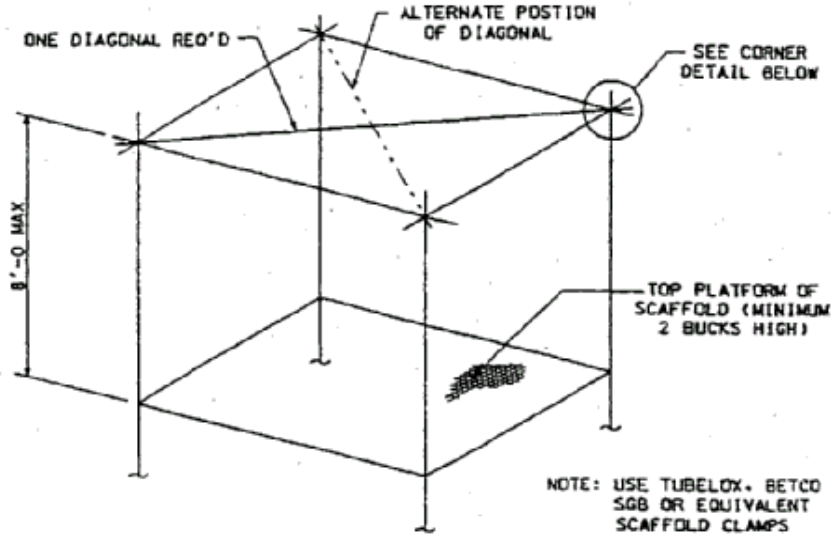

SCAFFOLD ANCHORAGE

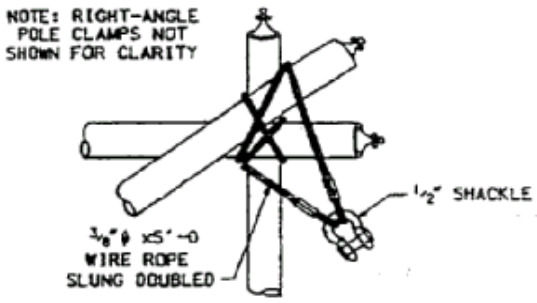

CORNER DETAIL

VERTICAL LIFELINE DETAILS

This document is the property of SPCC who will safeguard its rights according to the civil and penal provisions of the Law.

NOTES:

1. ALL MEMBERS ARE 2x4 #2 GRADE SOUTHERN YELLOW PINE OR EQUAL
2. NAILING:
   a) FOR ALL LONGITUDINAL MEMBERS TO POST: USE 2-10d COMMON NAILS.
   b) FOR ALL POST SYSTEM MEMBERS: TOENAIL 4-10d COMMON NAILS.
3. MAXIMUM SPACING FOR POST SYSTEM TO BE 8'-0 CC MAXIMUM.

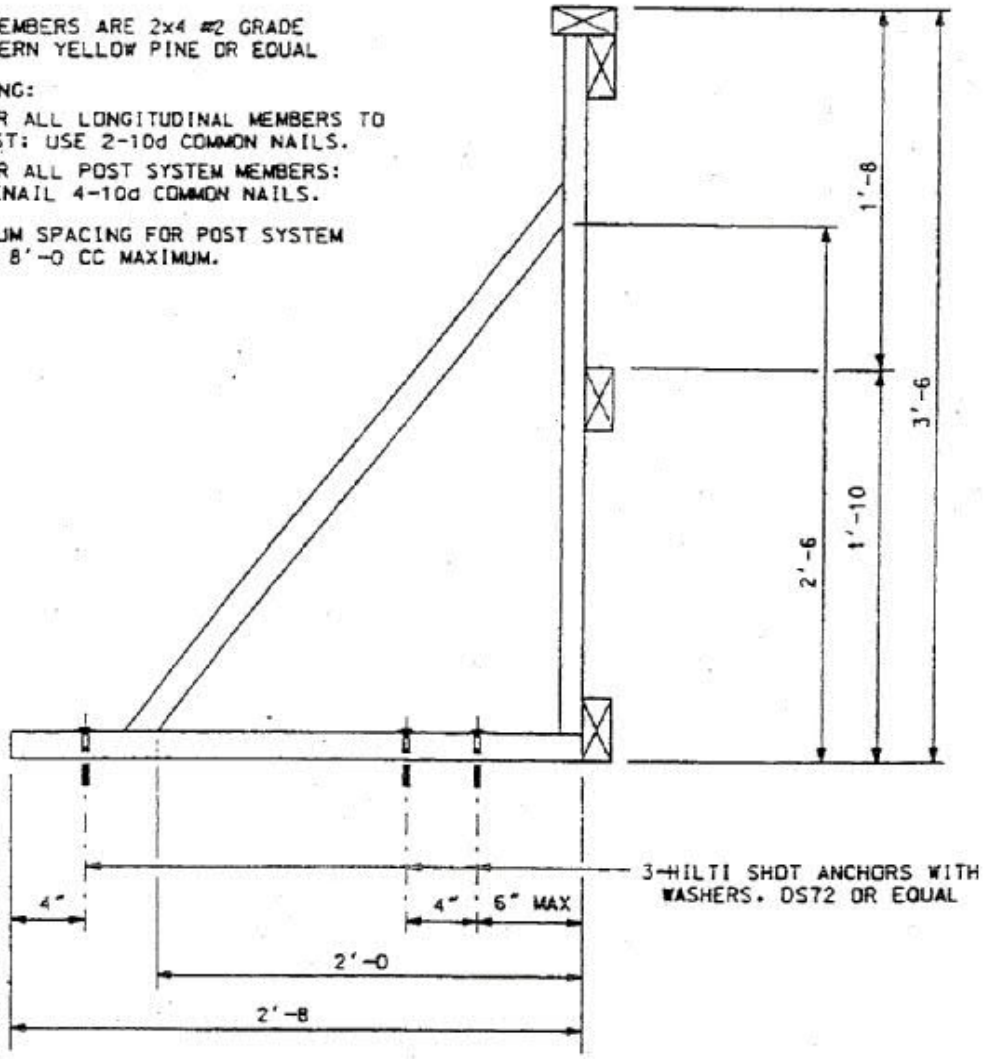

TYPICAL WOOD GUARDRAIL DETAIL

This document is the property of SPCC who will safeguard its rights according to the civil and penal provisions of the Law.

PTTLNG Nong Fab LNG Receiving Terminal Project

SHE PROCEDURES
(Fire prevention in construction)

Doc. Class Z

This document is the property of SPCC who will safeguard its rights according to the civil and penal provisions of the Law.

Revision list:

Rev. Nr	Modifications:
R1	First Issue

TABLE OF CONTENTS

1 PURPOSE 108

2 REFERENCE DOCUMENTS 108

3 RESPONSIBILITIES 108

4 INTRODUCTION 110

5 DESCRIPTION OF SAFETY PRECAUTIONS 110

5.1 Cutting and welding 110

5.2 Wood Cuttings, Off Cuts, Sawdust 111

5.3 Summary of fire fighting provision by subcontractor 111

5.4 Fire fighting provision for camps 111

5.5 Fire prevention in offices 112

5.6 Combustible materials 113

5.7 Flammable liquids 113

5.8 Restricted areas 114

5.9 Fire extinguishers 114

5.10 Fire fighting 115

5.11 Maintenance of fire fighting equipment 115

This document is the property of SPCC who will safeguard its rights according to the civil and penal provisions of the Law.

1 PURPOSE

The purpose of this procedure is to highlight the fire hazards, precautions and suppression facilities required during the construction activities.To be applied to all facilities including workshops, offices, temporary accommodation and construction areas.

2 REFERENCE DOCUMENTS

- STD-COR-HSE-016
- STD-COR-HSE-005

3 RESPONSIBILITIES

The Contractor Field Project SHE Manager has the following responsibilities:

- to ensure that the workings of this procedure are known and followed by the personnel with specified duties;
- to assist with the development of the written emergency plans;
- to regularly monitor the application of this procedure;
- to provide whatever training is required for fire teams and fire wardens;
- ensuring that fire detection systems provided are adequate and that regular and routine maintenance schedules are being followed;
- provision of personnel tasked with checking and maintaining fire extinguishers.

Contractor Personnel and Administration Manager shall ensure the following:

- a written emergency plan encompassing all areas under his control and supervision, is prepared;
- that an appropriate number of office staff are assigned with the responsibility to act as fire wardens, with the duties of marshalling and controlling the evacuation of premises (there shall be a minimum number of two marshals for each muster point);
- that office staff (in particular new starts) are briefed and kept updated on fire and emergency response procedures, including muster points;
- maintenance of an inventory of flammable materials e.g. photocopier fluids, and control of the usage to the minimum required;
- provision of lidded refuse containers for the safe disposal of aerosols which have contained flammable materials;
- ensuring that a clean desk policy is being adhered to and that materials are not allowed to accumulate by regular housekeeping, and checks of the offices at the close of business;
- daily checks of the office to ensure that walkways are not obstructed, carpet and other fittings are secure, fire doors kept closed and that the means of escape are being maintained;
- provision of metal filing cabinets for documents, stationary and other potentially flammable items;

This document is the property of SPCC who will safeguard its rights according to the civil and penal provisions of the Law.

- liaise with the Contractor electrical/instrumentation department for the inspection, testing and servicing of fire alarms, smoke detection units etc.;
- kitchen areas are a particular location for fire hazards and shall be monitored to ensure that electrical fittings are being turned off after use and do not present a fire hazard;
- clear glass doors shall have the direction of opening e.g. push/pull and a warning strip placed to prevent personnel running into them;
- training in the use of fire extinguishers shall be given and signs displayed highlighting the emergency procedures.

Liaison will also take place with the Contractor Field Project SHE Manager for regular audits and inspections of the office and surrounding areas including muster points, external walkways etc.

The Contractor Project Manager Construction shall comply with the above outlined requirements; additionally he will check the accommodation areas to ensure that residents are complying with the requirements for fire protection.

Specifically:

- ensure that personnel are informed not to interfere with fire detection equipment;
- that a 'NO SMOKING' policy applies in the bedroom areas;
- ensure that night security guards regular patrol the camp areas and ensure that fire has not broken out, security lights are operable and identify any other potential area of risk.

The subcontractor Maintenance Manager shall ensure that the following control measures are in place:

- workshops are maintained in a neat and tidy manner and that waste oil, rags and other flammable materials are removed at the end of each shift or as necessary;
- that maintenance personnel are instructed on the use of fire extinguishers, raising the alarm and fire hazards in the work place;
- battery recharging will be conducted in well ventilated areas, with no smoking signs and fire extinguishers in place;
- areas around pedestal grinders and other hot work type activities are kept free of combustibles;
- welding and burning shall be screened and controlled to prevent fire risk and exposure to personnel;
- that flammable liquids such as; gasoline, diesel etc. are not used for cleaning purposes;
- provision of adequate storage areas that are located in places where exits, passageways and stairways are not adversely affected.

This document is the property of SPCC who will safeguard its rights according to the civil and penal provisions of the Law.

4 INTRODUCTION

The purpose of this document is to prevent as many fires on construction sites as possible and to reduce the severity of those that do occur. Most fires can be prevented by reducing the number of hazards present, both in terms of potential sources of ignition as well as the fire load. Planning for fire safety must include available adequate resources, in terms of time, materials and money for the provision and maintenance of suitable and sufficient general fire precautions for the duration of the project.

A management culture should be adopted such that suitable procedures and standards are laid down and adopted by all parties concerned in the project regarding the prevention of fires.

The contractor shall require sub contractor to observe their duties to ensure that the fire risk and potential for damage have been properly assessed and are kept to a minimum during construction.

5 DESCRIPTION OF SAFETY PRECAUTIONS

The following general instructions shall be followed and adhered to:

- materials and equipment shall be maintained in an orderly manner that reduces or prevents the possibility of fire spread;
- materials shall not be stored in a manner that obstructs fire points, sprinkler heads, alarms, emergency exits, electrical panels and walkways;
- materials will not be stored close to, or in a manner that conceals, floor openings or hoist-ways;
- consideration shall be given to the fire loading imposed in an area by the placement of materials;
- doors provided for emergency escape will open outwards in the direction of travel.
- equipment will not be fuelled while the engine is running;
- smoking is prohibited whilst refuelling activities are taking place;
- incompatible materials will not be stored in proximity to each other.

5.1 CUTTING AND WELDING

Cutting and welding is PTW - controlled work.

Particular care will be taken when carrying out hot work operations in locations where combustibles may be present.

This will include precautions such as inspection of the surrounding area, removal of any combustible materials, protection by fire blankets and provision of fire extinguishers.

Compressed gas cylinders shall be closed when not in use, stored and used in an upright position, have their protective caps fitted when moving and transporting them (unless by cylinder trolleys).

Compressed gas cylinders shall be kept clear of electrical equipment and cabling where they may become part of an electrical circuit.

This document is the property of SPCC who will safeguard its rights according to the civil and penal provisions of the Law.

Gas cylinders shall not be taken into confined spaces, and feed hoses and nozzles when used in confined spaces shall be removed when not in use. Oxygen cylinders shall be kept free of oil and grease.

Valve wrenches shall be left in position on the valve stem at all times when the cylinder is in use.

Fuel gas and oxygen hoses shall be clearly distinguishable, in good condition and secured properly (Wire is not permitted).

Cylinders shall be fitted with flash back arrestors.

Fire extinguishers shall be available before hot work commences and persons trained in their correct use.

5.2 WOOD CUTTINGS, OFF CUTS, SAWDUST

- Carpenter shop will be swept clean daily (or more frequently subject to workload).
- Cuttings, off-cuts, etc. will be placed immediately in internal bin(s) adjacent to bandsaws, planing machines, etc. prior to being removed to external collectors.
- Wood shapes will be neatly bulk stored external to shop by size in racks or similar and raised from grade. Materials marshalled within the shop will also be stored in racks or feeder tables and must not be allowed to clutter floor space adjacent to shop equipment. Safe access and egress to and from machines must be maintained at all times.
- Plywood and or steel shutters will be neatly stacked and raised above grade.
- Prime consideration will be given to maintaining access ways for fire fighting vehicular equipment.

5.3 SUMMARY OF FIRE FIGHTING PROVISION BY SUBCONTRACTOR

Portable fire extinguishers shall be provided in all work-site and office location.

Subcontractor shall be supply fire extinguishers at all work areas within the facilities.

Fire fighting provisions in addition to this by Site shall be as agreed with the Company at mobilization stage.

5.4 FIRE FIGHTING PROVISION FOR CAMPS

Contractor Camps area shall be provided with adequate fire extinguishers, maintained and readily available. The Field Project SHE Manager (FPSHEM) shall be consulted for advice on selection of equipment. Fire hydrant shall be placed in required location with appropriate pressure in the premises of camps.

There are three classes of fire extinguishers normally found on work sites:

This document is the property of SPCC who will safeguard its rights according to the civil and penal provisions of the Law.

- Water[1]
- Carbon dioxide (CO2)[2]
- Chemical dry powder[3]



For the Subcontractors camps, the same above provisions are required.

5.5 FIRE PREVENTION IN OFFICES

Adequate numbers of fire extinguishers shall be provided in all office areas.

All fire escape routes and exit doors, alarm points and fire fighting equipment shall be kept clear of obstructions at all times.

Fire wardens shall be appointed for all office buildings, in sufficient numbers such that in case of fire control of personnel shall be easily accomplished.

---

[1] ***Water***

- Water is most effective on combustible material fires and is the best extinguishing agent for a very large fire. Water is available from:
- Fire hydrants located around the perimeter of the plant, camp and outside plant buildings.

[2] ***Carbon Dioxide (CO2)***

- CO2 is a liquified gas, stored under pressure which vaporizes when released. It smothers the fire by excluding air. CO2 is best suited for indoor use. It is of limited value where wind or drafts can affect the flow of the gas.
- CO2 extinguishers are also used where water damage or fouling of delicate equipment cannot be tolerated or cleanup is a consideration.
- This type of extinguisher is used primarily in labs computer and motor control centers.
- ABC type dry chemical fire extinguishers are effective on small fires involving flammable liquids, electrical equipment and combustible materials (wood, paper, cloth, cardboard, etc).

[3] ***Chemical Dry Powder***

- BC type dry chemical fire extinguishers are most effective for extinguishing small fires involving flammable and combustible liquids, gases and oils. They are also suitable for fighting fires involving electrical equipment.
- Dry chemical is not as effective as water in extinguishing deep-seated fires in ordinary combustibles.
- A 20 lb ABC dry chemical is the only type extinguisher that can be used for fire watch or standby. A pressurized fire hose may also be used as a backup when one is available.

This document is the property of SPCC who will safeguard its rights according to the civil and penal provisions of the Law.

All personnel shall be familiar with the fire emergency procedures, alarms and equipment, personal responsibilities and evacuation procedures in the event of a fire alarm.

Regular fire drills shall be performed to ensure this and a fire plan shall be posted on the office building notice boards.

All flammable liquids, such as photocopiers toners, cleaning solvents, draftsman's sprays shall be stored away from sources of heat and ignition or naked flames, in metal cabinets. Only quantities in direct use shall be brought into the workplace.

Empty containers and aerosols, which have contained flammable liquids, shall be disposed of forthwith in a secure lidded refuse container.

Appliances such as electric heating rings are not permitted in normal office space, but shall be confined to designated cooking areas.

However, domestic electric kettles and coffee percolators may be placed in the general office space, provided they are positioned securely, and are supplied directly with a power point. They shall not be powered via an extension cord.

Smoking in construction area should be forbidden and relative safety sings should be set up. All temporary electrical equipment used during construction phase should be in accordance to relevant codes and standards. Smoke detectors shall be installed in camps and site office. Periodically inspection should be carried out for all the equipments installed for fire detection.

5.6 COMBUSTIBLE MATERIALS

Combustible materials likely to be encountered on job-sites are cable insulation material, vehicle tires, scrap packing material and flammable liquids fuels or lubricants.

Rubbish if allowed to accumulate on the job-site provides a good starting point for fire.

All wastes, packing materials, wood shavings, oily rags and other unwanted materials will be collected at regular intervals.
Metal bins with close-fitting lids will be provided for such waste materials.

Good housekeeping on the site at all times can eliminate most of the combustible materials that act as fuel for fire.

5.7 FLAMMABLE LIQUIDS

Problems are likely to come from fuels used by construction equipment.

Care in handling these flammable products is of prime importance and is one of the keys to fire prevention.

This document is the property of SPCC who will safeguard its rights according to the civil and penal provisions of the Law.

In storage, all flammable liquids will be kept in securely capped cans or steel drums on which the contents are clearly marked.

Gasoline, acetone spirits and other volatile liquids with flash points below 21 °C will be kept in robust metal lockers, well ventilated, in non combustible huts or in the open.

Storage will be securely locked or fenced, and be situated away from other buildings or storage areas.
Other materials will not be stored with flammable liquids.

In handling, the following precautions will be observed:

- transport will always be in closed containers;
- transfer operations will be carried out with funnels and there will be no naked flame within 6-8 meters of the operations;
- screw tops and stoppers will be replaced at once.

Gasoline and diesel powered equipment will only be used in well ventilated areas.

Exhaust pipes will be kept away from combustibles materials.

Engines will be stopped before refuelling takes place.

5.8 RESTRICTED AREAS

These may be areas designated by Contractor.

In these areas either special working permits will be issued to ensure safe operation.

A restriction area will be defined as an area where flammable gases/oils are likely to be, present.

5.9 FIRE EXTINGUISHERS

The Field SHE Manager (FHSEM) shall ensure that work-site and office area and the facilities construction area are provided with adequate fire extinguishers, maintained and readily available.

The Field SHE Manager (FSHEM) shall be consulted for advice on selection of equipment.

There are three classes of fire extinguishers normally found on work sites:

- Water;
- Carbon dioxide (CO2);
- Chemical dry powder.

This document is the property of SPCC who will safeguard its rights according to the civil and penal provisions of the Law.

5.10 FIRE FIGHTING

Fire wardens shall check at beginning of each shift that the work groups in their area of responsibility are fully aware of location and use of fire fighting equipment.

Should there be any question regarding the use of the equipment that the project is required to have on hand, the Field SHE Manager (FSHEM) should be contracted.

He can assist in training employees in the use of equipment.

In case if the fire cannot be extinguished with fire extinguisher an intervention by external fire truck will be required.

5.11 MAINTENANCE OF FIRE FIGHTING EQUIPMENT

All Subcontractors each for the own area will ensure that all the necessary fire fighting equipments are located in the correct position and at a regular intervals other than to make responsible safety officers to check that the equipment is in good working order.

Each Subcontractor Safety Manager for the own area will keep a record of all fire fighting equipment and also a register of inspection of the equipment.

The portable fire equipment will be checked at least once in a month.

If a fire extinguisher has been discharged, the extinguisher will be removed from site and it is responsibility of the Safety Officer of the section in which the extinguisher was placed to notify the Safety Manager.
The Safety Officer (Contractor and Subcontractor) will ensure that the extinguisher is replaced and that the discharged unit is refilled.

This document is the property of SPCC who will safeguard its rights according to the civil and penal provisions of the Law.

PTTLNG Nong Fab LNG Receiving Terminal Project

SHE PROCEDURES
(GAS CYLINDERS STORAGE, TRANSPORTATION AND USE)

Doc. Class Z

This document is the property of SPCC who will safeguard its rights according to the civil and penal provisions of the Law.

Revision list:

Rev. Nr	Modifications:
R1	First Issue

TABLE OF CONTENTS

1 PURPOSE 119

2 REFERENCE DOCUMENTS 119

3 RESPONSIBILITY 119

4 INTRODUCTION 119

5 DESCRIPTION OF SAFETY PRECUATIONS 120

5.1 Acceptance 120

5.2 Marking 120

5.3 Use of Cylinders 121

5.4 Storage 123

5.5 Transport of cylinders 124

5.6 Hazards associated 125

5.7 Rubber hoses 127

5.8 Flame arrestors 128

5.9 Pressure regulators and tests 128

5.10 Torches 129

5.11 Equipment attention 129

5.12 Protective equipment 129

5.13 Working in confined spaces 130

5.14 Training 130

ATTACHMENT A – LABELLING OF GAS CYLINDERS 131

This document is the property of SPCC who will safeguard its rights according to the civil and penal provisions of the Law.

This document is the property of SPCC who will safeguard its rights according to the civil and penal provisions of the Law.

1 PURPOSE

The purpose of this procedure is to provide guidance during the construction on the onshore Project.The procedure covers the handling and storage of all compressed gas cylinders to be used by subcontractors and contractors.

2 REFERENCE DOCUMENTS

- STD-COR-HSE-016
- STD-COR-HSE-005

3 RESPONSIBILITY

Providing advice on this procedure, and for providing oversight inspections to verify compliance.

Supervisor

Implementing this procedure, monitoring compliance, and enforcing the requirements of this procedure.

Employees

Complying with the requirements of this procedure and making Safety an integral part of each job.

Material Section

Warehouse personnel shall ensure that the gas cylinders are received with proper identification markings / color-codings.

4 INTRODUCTION

Compressed gas cylinders are used in many workplaces to store gases that vary from extremely flammable (acetylene) to extremely inert (helium). Many compressed gas cylinders are stored at extremely high pressures (up to 2,500 pounds per square inch gauge or PSIG). A sudden release of these gases can cause a cylinder to become a missile-like projectile. Cylinders have been known to penetrate concrete-block walls. If handled properly compressed gas cylinders are safe. If handled improperly, the same cylinders can present a severe hazard to you and the surrounding area.

This document is the property of SPCC who will safeguard its rights according to the civil and penal provisions of the Law.

5 DESCRIPTION OF SAFETY PRECUATIONS

All portable gas cylinders used for the storage and shipment of compressed gases shall be constructed and maintained in accordance with the existing laws.

Subcontractors are to ensure that personnel involved with the handling and use of cylinder gases are instructed in the hazards associated with the use of gases and equipment.

Particular attention should be given to the following guidelines when instructing personnel in safe working.

5.1 ACCEPTANCE

Cylinders are accepted subject to the following conditions:

a. the specific contents must be identified by name and color-coding. Do not deface, or remove labels or tags used to identify cylinder contents;
b. cylinders shall be free from corrosion, pitting, dents or other signs of physical damage;
c. protective Safety caps must be in place (hand tight) when cylinders are delivered.

It is the responsibility of warehouse staff to check that the above conditions are met.

If not, the cylinders are rejected.

Cases where there is doubt are referred to the Safety Section.

5.2 MARKING

Compressed gas cylinders shall be legibly marked, for the purpose of identifying the gas content, with either the chemical or the trade name of the gas.

Such marking shall be by means or stenciling, stamping, or labelling, and shall not be readily removable.

Whenever practical, the marking shall be located on the shoulder of the cylinder.

Minimum typical marks

Normally cylinders are identified by marks engraved in an easily seen position with the following information:

- type of gas;
- cylinder manufacturer's name;
- date of manufacture;
- date of test;

This document is the property of SPCC who will safeguard its rights according to the civil and penal provisions of the Law.

- operating pressure;
- volume.

The method of marking cylinders varies in different countries of operation, it therefore is essential to know local regulations concerning the operation and identification of gases.

The contents of cylinders shall be clearly shown by the marking on the cylinder.

Cylinders not marked as tested or without standard valve fittings shall not be used.

Cylinders being transported shall, where provision is made, have valve protection caps fitted.

5.3 USE OF CYLINDERS

Cylinders shall be used by experienced and authorised persons only.

Cylinder valve protection caps, that allow the valve to be operated, shall not be removed; when in use, caps shall be firmly screwed down.

Protective Safety caps must be in place (hand tight) when the cylinder is not in use to protect regulator valves, and ensure that protective caps are returned with the empty cylinders for refilling.

Cylinders shall be returned to an approved store when not in use.

Cylinders in excess of requirements shall not be kept at the jobsite.

Cylinders with defective valves shall not be used.

Threads of pressure regulators shall be in good condition and of the same size and thread as the valve outlet.

Cylinders shall only be used with the correct type and size of regulator.

Before connecting a pressure regulator to a cylinder, the cylinder valve should be slightly opened to clear away any dust which may have gathered at the outlet.

After use, cylinder valves shall be closed, and if the valve cap has been removed, it shall be replaced. Hoses to be depressurized.

Should a gas leak occur, the control valve shall be closed and the cylinder removed to a place of safety.

Empty and charged cylinders shall be stored in separate locations.

Empty cylinders should be marked as such.

This document is the property of SPCC who will safeguard its rights according to the civil and penal provisions of the Law.

Cylinders shall not be positioned with their weight on the valve.

Charged cylinders shall be stood upright and securely fixed to prevent them from falling.

Cylinders should not be placed where they can obstruct traffic, where this is not possible suitable warning signs shall be positioned.

Cylinders should not be left in a location exposed to the sun, or other heat source unless a suitable protective screen is provided.
Subcontractor shall ensure that cylinders are not exposed to the risk of damage by:

- Shock;
- Falling material;
- Incandescent material.

In the event of fire, cylinders liable to be affected should have their outlet valve closed and be immediately removed to a place of safety.

Cylinders shall not be allowed to come into contact with corrosive material.

Cylinders shall not be used as work supports, rollers, etc.

To avoid the possibility of explosive mixtures forming, cylinders shall not be left in badly ventilated places.

Cylinders shall not be taken into basements or other underground locations unless provision has been made for their quick removal in case of emergency.

Cylinder gases shall be used for their specified purpose only.

The substitution of oxygen for compressed air is highly dangerous and shall not be permitted under any circumstance.

Valves shall be closed on empty cylinders.

Cylinder relief devices are necessary to prevent rupture due to overpressure or high temperature.

Do not tamper with, modify, change, obstruct or attempt to repair cylinder relief devices.

This includes fusible plugs on toxic gas cylinders, or rupture discs on other types. Repairs are to be made by qualified personnel only.

To prevent the interchange of fittings between cylinders containing combustible gas and non combustible gas, valve outlets are threaded in opposite directions.

Non-combustible gases like oxygen, nitrogen, argon and air have right hand threads.

Do not place cylinders where they may become part of an electrical circuit.

This document is the property of SPCC who will safeguard its rights according to the civil and penal provisions of the Law.

Test cylinders for leaks. Never test for leaks with an open flame.

Only manufactured and approved adapters should be used on any compressed gas cylinders. Home-made adapters should not be used.

Only qualified personnel, are allowed to refill cylinders.

Refilling must be done under controlled conditions (i.e., breathing air cylinders).

Personnel who refill any compressed gas cylinders must be trained and authorized.

DO NOT FILL CYLINDERS WITH MATERIAL OTHER THAN THAT MARKED ON THE CYLINDER.

Never check a cylinder's contents or pressure by opening its main valve to the atmosphere without full control of the valve.

Crack or slowly open to control flow.

5.4 STORAGE

Cylinder gases shall be stored in approved storage areas which shall comply with local and statutory requirements.

Cylinders shall be stored in separated groups, according to their contents.

The name of the stored material shall be indicated in each storage area.

Empty and charged cylinders shall be stored separately and warning signs to be installed.

Cylinders shall not be allowed to remain in badly ventilated areas, even when not in use.

Storage of liquefied petroleum gas within buildings is prohibited.

Storage locations shall have at least one approved portable fire extinguisher of at least 20 Kg capacity and BC fire classes.

The location of all cylinders on site shall be recorded.

Cylinders shall be stored in an upright position and secured to prevent them from falling. Never lay them on their side.

To avoid the risk of explosion, fuel and combustible gases shall be stored in separate locations.

This document is the property of SPCC who will safeguard its rights according to the civil and penal provisions of the Law.

Valves shall be fully closed with the Safety cap in position.

Cylinders should be stored according to the following:

- Preferred storage for cylinders is in a cool dry well ventilated area. When the distance between groups of cylinders containing flammable or combustible materials is lower than 6 m, compartments shall be provided between the groups. Dividing walls shall be 1.5 meters high and shall have a fire resistance of one hour.
- All cylinders must be stored outside of the warehouse buildings but under cover from direct sunlight and heat.

Cylinders shall be kept away from radiators and sources of heat.

Both Chlorine and Ammonia cylinders should not be stored together, and should be stored separately at least 6 meters away from all other compressed gases.

Large size (one ton) cylinders are sometimes used for chlorine, freon, and other materials.

These devices are designed to be stored and used in the horizontal position.

There are two delivery valves, one for vapor and one for liquid. The valves on a ton container should be aligned in a vertical position before use.

All cylinder storage areas are fenced off and clearly marked with "NO SMOKING" and "NO NAKED FLAME" signs.

5.5 TRANSPORT OF CYLINDERS

Caps on gas cylinders shall be secured before moving them, except when moving a burner buggy by hand.

Cylinders being transported on vehicles shall be secured against any movement which could result in damage. Use trolleys in the site for the transportation of cylinders.

When being transported, cylinder valves shall be protected by suitable means. (chain, cages, etc).

Never move a cylinder with regulator in place, with possible exception of breathing air cylinders mounted on portable trolley carriers.

Cylinders shall be handled only by persons authorised.

Cylinders shall be carried within the confines of vehicles and shall not project beyond the sides or ends of the vehicles.

This document is the property of SPCC who will safeguard its rights according to the civil and penal provisions of the Law.

For short distances, cylinders should be moved by means of a hand truck; if this is not possible, by revolving the cylinder on its bottom edge.

Cylinders should never be tipped, slided, rolled, dropped or dragged along the ground as this damages the identification of cylinder and may also damage or open the valve.

Suitable containers shall be used when hoisting cylinders by crane or forklift.

Cylinders shall not be slung or lifted by magnets.

If cylinders heavier than 20 kg must be lifted, observe the following:

- lift cylinders only by using a suitable cradle platform;
- cylinders should not be lifted using ropes, chains, or slings unless the cylinder was manufactured with lifting lugs;
- do not lift cylinders by their cap.

Loading and unloading of cylinders shall be undertaken with care, rubber mats or wooden bearers should be used when sliding cylinders.

Transporting a welding cart by hitching to the back of a vehicle is dangerous and prohibited.

Also when transporting a welding trolley, the gauges must be disconnected and removed, and the cylinder valves closed and capped.

5.6 HAZARDS ASSOCIATED

Release of gas from a compressed gas cylinder, in an enclosed or poorly ventilated area can create a flammable, explosive, toxic or oxygen deficient atmosphere.

Compressed gas cylinders are also shipping containers, and as such are constructed as lightly as possible, consistent with Safety and durability.

If mishandled or abused, they may rupture, releasing their contents.

If not secured, a cylinder may be propelled into people or equipment by the energy of the escaping gas.

High temperature may cause a cylinder relief device to release the entire contents of the cylinder.

This may be due to increased pressure, bursting a rupture disc, or high temperature releasing a gas cylinder's fusible plug.

Chlorine cylinders and containers, for example have a fusible plug which melts at between 71 and 74 °C.

This document is the property of SPCC who will safeguard its rights according to the civil and penal provisions of the Law.

Pure oxygen (as found in compressed gas cylinders) can react violently with oil or grease.

Compressed gas cylinders are generally bulky and heavy.

They can cause serious injury if they drop on, fall on, or otherwise strike a person.

Material released directly from a cylinder may be extremely cold and can be ejected at high velocity.

It may cause frostbite or bodily injury if it contacts a person directly.

Compressed gas cylinder colour coding shall be communicated to all company employees.

Oxygen cylinders

Oxygen is usually contained in cylinders at a pressure of 125/200 kgs/sq.cm.

Under NO circumstances oil or grease be allowed in contact with oxygen cylinders.

Valves and pressure regulators shall be maintained in a clean condition, and be completely free of oil and grease.

Oxygen shall never be handled with greasy hands, cloths or gloves.

Cylinders should not be completely emptied, a pressure of 4 kg/sq.cm. should be allowed to remain in the cylinder.

Acetylene cylinders

Acetylene is usually contained in cylinders at a pressure of 15/20 kgs/sq.cm. dissolved in acetone.

Acetylene cylinders shall always be stood in an upright position to avoid escape of acetone.

Acetylene gas control keys shall always be kept in the valve while the cylinder is in use.

Never use copper or copper alloy fittings with acetylene, doing so will cause the formation of copper acetylide which can be ignited by means of a slight bump.

Cylinders should not be completely emptied.

A slight pressure should be maintained in the cylinder to prevent the leakage of acetone.

This document is the property of SPCC who will safeguard its rights according to the civil and penal provisions of the Law.

Should a cylinder heat up, the control valve should immediately be closed and water applied until the cylinder is cool.

When sufficiently cold the cylinder should be removed to a safe place and the supplier contacted for advice.

Natural gas and L.P.G. cylinders

These gases are hazardous and when combined with oxygen can form an explosive mixture.

They shall be treated the same as acetylene cylinders.

Cylinder pressures range from 125 to 200 kgs/sq.cm. for natural gases and from 7 to 8 kgs/sq. for LPG.

Weights of different gases

Gases have different weights (vapour density) and therefore leaks will present different hazards.

- *Acetylene is lighter than air (1:0.9) and will gather and form inflammable pockets at the top of badly ventilated spaces.*
- *Oxygen is heavier than air (1:11) and will collect at the bottom of vessels, whilst not inflammable by itself can promote rapid combustion.*
- *L.P.G. is also heavier than air (1/1.5-2) and will form pockets of inflammable gas at the bottom of vessels and similar places.*
  (Please noted: mobilize or deliverly of the domestic L.P.G. cylinders into the construction site is forbidden.

5.7 RUBBER HOSES

All hoses in welding and cutting operations shall be suitable for this purpose and be of a construction and specification approved by the manufacturer of the equipment.

Hoses should be examined before use and if found to be defective replaced without delay. All hoses shall be checked with soap water solution to ensure absence of leak .

Hoses used when a flashback occurs could sustain unseen internal damage and shall therefore be replaced.

Since acetylene can form explosive compounds upon contact with copper and copper alloys, the use of these materials shall not be permitted in hose lines.

All hose connections shall be made by the use of effective clips or crimps.

All fittings should be regularly checked to prevent leakage.

Hoses shall be maintained in a safe working condition and should not be exposed to sources of heat, oil and/or grease.

This document is the property of SPCC who will safeguard its rights according to the civil and penal provisions of the Law.

Oxygen and fuel gas hoses shall not be interchanged.

Use only the correctly coloured hose with the appropriate gas.

Do not use oxygen to clean fuel lines or fuel gas to clean oxygen lines, such practice can result in the formation of explosive gases.

Hoses should not be pulled. This action will result in leaking connections.

Do not allow sharp bends or kinks to form in hoses.

Workers shall not work with hoses routed over their shoulders or between their legs.

Soup test on hoses connection and gauges to be done before the use of its.

5.8 FLAME ARRESTORS

Flashback arrestors are designed to prevent an explosion occurring and shall always be fitted at the torch and at the gauges connections.

Flashback arrestors shall be properly maintained and checked regularly.

Flashback arrestor has to be fitted at the torch and at the gauges (both the ends).

5.9 PRESSURE REGULATORS AND TESTS

Pressure regulators shall always be fitted to cylinders in use.

Regulators are designed for specific gases and shall not be interchanged.

Pressure regulators shall be maintained in accordance with the maker's instructions.

Defective regulators shall not be used.

Do not use a naked flame on frozen equipment.

Each cylinder must be pressure-tested at the frequency specified by National Fire Protection Association (NFPA) and must be indelibly marked with the date of such test.

Regulators should be used only to control pressure, not to stop flow. Likewise, manual valve is not a substitute for a pressure regulator.

Never open a valve more than 3 full turns. One full turn is usually enough. Always open the valve slowly.

This document is the property of SPCC who will safeguard its rights according to the civil and penal provisions of the Law.

An exception being breathing air cylinders which should be either fully opened or fully closed.

Before removing the regulator, close the cylinder valve, and bleed the pressure off of the regulator.

In addition to a pressure regulator, a pressure relief device should be used to protect the downstream system.

After attaching regulator, and before cylinder valve is opened, see that adjusting screw of the regulator is released.

Stand to one side with the regulator pointing away from you.

Open cylinder valves slowly. Never use wrenches or tools, except those provided or approved by the manufacturer. Never hammer the valve wheel in attempting to open or close the valve.

5.10 TORCHES

Never drape hoses around cylinders or any of its fittings.

Whenever possible use a spark to light the torch if it is necessary to use some other means of ignition ensure that it does not present a fire risk.

During work breaks, torches shall be extinguished and cylinder valves closed.

Should a back fire occur, close the torch valves, oxygen first and, if the torch is overheated, plunge it into water until is cool.

5.11 EQUIPMENT ATTENTION

Equipment should not be left unattended during work breaks.

5.12 PROTECTIVE EQUIPMENT

Operators and their assistants shall wear eye protection at all times when welding and cutting.

Gloves, leggings, aprons and any other clothing provided for the protection of personnel shall be worn.

Operators shall not wear oily and greasy clothing.

This document is the property of SPCC who will safeguard its rights according to the civil and penal provisions of the Law.

5.13 WORKING IN CONFINED SPACES

Authorisation shall be obtained before undertaking any work or inspection in vessels, sewers, pipes, tanks or other confined spaces where failure to observe adequate precautions could result in personnel becoming affected by:

- harmful fumes, gas, vapour or liquid;
- an insufficient supply of clean air.

All work of this description shall only be carried out in strict accordance with local and statutory regulations.

5.14 TRAINING

Each person involved in the storage, handling or use of compressed gases, should be trained in safe cylinder work practices and familiar with this procedure.

People working with compressed gases should be familiar with the properties of the gases.

Training should include information on hazardous properties, personal protection, and first aid which is available on the appropriate MSDS sheets.

Personnel shall be trained in the correct return or disposal of cylinders.

Personnel shall be trained to perform a visual inspection of the physical condition of cylinders.

This document is the property of SPCC who will safeguard its rights according to the civil and penal provisions of the Law.

ATTACHMENT A – LABELLING OF GAS CYLINDERS

An example of a nameplate is given below:

1. UN no. and name of gas
2. Composition of the gas or mixture
3. Name, address and telephone number of the manufacturer or distributor
4. Danger symbols
5. Risk phrases
6. Precautionary advice
7. CR number for single substance or marking “gas mixture”.

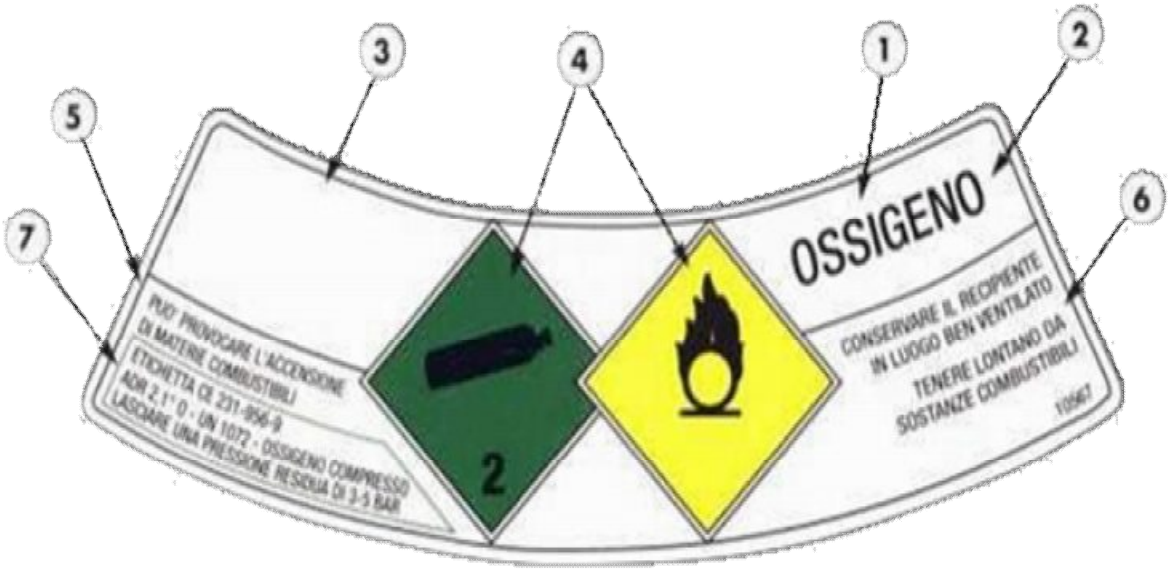

This document is the property of SPCC who will safeguard its rights according to the civil and penal provisions of the Law.

Identification of the gas contained in the cylinder through the colour of the ogive varies from country to country; some identifying colours are given below.

Gas with individual Colouring	Formula	Old Colouring	Ogive Color	New Colouring	Ogive Colour
ACETYLENE	C_2H_2		Orange		Reddish brown
AMMONIA	NH_3		Green		Yellow*
ARGON	Ar		Amaranth		Dark green
NITROGEN	N_2		Black		Black
CARBON DIOXIDE	CO_2		Light grey		Grey
CHLORINE	Cl_2		Yellow		Yellow*
HELIUM	He		Brown		Brown
HYDROGEN	H_2		Red		Red
OXYGEN	O_2		White		White
NITROUS OXIDE	N_2O		Blue		Blue

This document is the property of SPCC who will safeguard its rights according to the civil and penal provisions of the Law.

INDUSTRIAL GASES

Other gases and mixtures with colouring by group of danger	Ogive	Old colouring (only for mixtures)	Ogive	New colouring
INERT		Aluminium		Bright green
FLAMMABILE		Aluminium		Red
OXIDIZING		Aluminium		Pale blue
TOXIC AND/OR CORROSIVE		Yellow		Yellow
TOXIC AND FLAMMABLE		Yellow		Yellow + Red
TOXIC AND OXIDIZING		Yellow		Yellow + Pale blue
INDUSTIAL AIR		White + Black		Bright green

This document is the property of SPCC who will safeguard its rights according to the civil and penal provisions of the Law.

PTTLNG Nong Fab LNG Receiving Terminal Project

SHE PROCEDURES (GRINDING WORKS)

Doc. Class Z

This document is the property of SPCC who will safeguard its rights according to the civil and penal provisions of the Law.

Revision list:

Rev. Nr	Modifications:
R1	First Issue

TABLE OF CONTENTS

1 PURPOSE 136

2 REFERENCE DOCUMENTS 136

3 RESPONSIBILITIES 136

4 INTRODUCTION 136

5 DESCRIPTION OF SAFETY PRECAUTIONS 137

5.1 General Instruction 137

5.2 Grinder Safety 137

5.2.1 Bench and Pedestrial Grinder 137

5.2.2 Portable Grinders 138

5.2.3 Abrasive Discs and Cut-Off Discs 139

5.2.4 Handling and Storing 140

5.2.5 Training Requirements 141

This document is the property of SPCC who will safeguard its rights according to the civil and penal provisions of the Law.

1 PURPOSE

This procedure covers the aspects related with cutting and grinding on the Construction site and associated facilities. Work will only be permitted if undertaken by competent and, where required, licensed personnel.

2 REFERENCE DOCUMENTS

- STD-COR-HSE-016
- STD-COR-HSE-005

3 RESPONSIBILITIES

Construction Project Manager is responsible to ensure that the project safety requirements and specific safety issues related to construction activities are considered.

It shall be the responsibility of all Supervisors to ensure that all Employees adhere to the requirements of this Procedure.

Field S H E Manager shall monitor the implementation and adherence to this Procedure and report violations and/or noncompliance issues for immediate corrective action.

4 INTRODUCTION

Grinding machines remove material from the work piece by abrasion, which can generate substantial amounts of heat. Whether they are portable or fixed, grinding wheels are designed to operate at very high speeds. If a grinding wheel shatters while in use, the fragments can travel over 300 miles per hour. The potential for serious injury, material damage and other losses from these shooting fragments is great. To ensure that grinding wheels are safely used in your workplace, know the hazards and how to control them.

This document is the property of SPCC who will safeguard its rights according to the civil and penal provisions of the Law.

5 DESCRIPTION OF SAFETY PRECAUTIONS

5.1 GENERAL INSTRUCTION

Cutting/ burning, welding and grinding, as well as any other activities that may produce sparks or fire hazards are generally classed as hot work.

An adequate number of dry powder fire extinguishers shall be located within close proximity to hot work areas.

No source of ignition will be introduced into a confined space until appropriate control measures are implemented and test results verify that dangerous air contamination and/or flammable and/or explosive substances do not exist within the confined space.

All slag and sparks must be contained within the immediate work area. Temporary fabrication shelters and hot work enclosures must be constructed from approved flame retardant material. When performing hot work above ground level, fire resistant blankets must be suspended directly below to prevent falling sparks/slag.Areas below shall also be fenced off.

Grinding operations may give rise to hazardous fumes. In some areas local exhaust ventilation must be used. In other more open areas respiratory protective equipment shall be worn.

Isolation switches shall be readily accessible.

Terminals and live components shall be adequately protected and cables shall be frequently inspected to ensure that insulation is intact.

Approved cable connectors shall be used when connecting runs of cables and cables must not be allowed to lie in water.

Machines used to drive abrasive wheels shall be in good condition, inspected daily and properly guarded.

Pedestal or bench mounted grinders shall have an emergency stop button and be fitted with a properly adjusted tool rest. Pedestal grinders must be securely fixed to the floor to prevent them from walking when in operation.

All hand held grinders shall have a "Dead Man" switch, safety guard and handle.

Operators and visitors must wear goggles or full-face visors, with safety glasses and gloves while operating, or in the vicinity of, abrasive wheels.The following general instructions shall be followed and adhered to.

All flammable materials, oily rags and combustible materials must be clear of grinding areas.

5.2 GRINDER SAFETY

5.2.1 Bench and Pedestrial Grinder

- Face shield with monogoggles and/or safety glasses with side shields shall be worn during grinding works.
- Tool rests and tongue guards shall be properly set.

This document is the property of SPCC who will safeguard its rights according to the civil and penal provisions of the Law.

- Stand clear of wheels and leave guards down until grinder reaches its maximum speed.
- Do not grind on the side of wheels.
- Do not adjust the work rest while the wheel is in motion.
- Do not use a wheel that is worn out of round until it is trued.
- Pneumatic grinders shall be used inside the confined space or 110 volts.
- To change the wheel or make adjustments on 220-volt pedestal and bench grinder, de-energize the push-button or switch and unplug the 220-volt cord.
- The Electrical Supervisor must be contacted before changing wheels or making adjustments on 220-V or greater, pedestal and bench grinders.
    - De-energize the push-button or switch, throw disconnect switch to "Off position and lock and tag disconnect switch.
    - The Electrical Department should be contacted for de-energizing.
- All bench and pedestal grinders are equipped with:
    - A protection hood.
    - An adjustable guard-hood guard.
    - Steel back-up flanges. All straight abrasive wheels shall be mounted between steel safety flanges of equal size, not less than one-third (1/3) the diameter of the wheel.
- Operators shall perform initial inspection and subsequent maintenance of all grinders. Inspections are made on an established schedule and records maintained by the inspecting person(s).
- The using craft/crew is responsible for maintaining the proper distance between the work rest and the wheel. The work rest shall remain 90 degrees to the tangent of the wheel at the point of contact.
- Grinders used for tungsten rods are marked and used only for that purpose.

5.2.2 Portable Grinders

- Are equipped with guards.
- Operator shall wear face shield and safety glasses.

This document is the property of SPCC who will safeguard its rights according to the civil and penal provisions of the Law.

General Instruction

- The RPM of a wheel shall always exceed the RPM rating of the grinder on which it is used.
- RPM rating shall be marked legibly on grinders.
- General purpose wheels are not to be used for grinding on soft metals such as aluminum.
- Shirt tails shall be tucked in and loose fitting clothes are not be permitted while using grinders.
- Employees shall warn personnel in the immediate area prior to grinding, and/or provide spark containment such as screens.
- Ear protection is mandatory for operators.
- Never use the cord to lower grinders from elevations.
- Deflection screens may be needed to protect personnel or other equipment.
- Perk's washers shall be used on all vitreous (inorganic) bonded wheels.
- Each Operator is responsible for the current inspection, condition of wheel (no chips), proper wheel RPM rating, proper washers, properly-spaced work rest, guards, and proper exhaust system.
- On all portable tools, the control switch shall be constant pressure controlled without locking pin.
- Wheels should be stored in a dry place with constant temperature above freezing and protected from physical damage.

5.2.3 Abrasive Discs and Cut-Off Discs

- Grinding is to be performed on the rim face only of abrasive discs.
- Check cut-off discs for chips - **DO NOT USE IF CHIPPED**.

This document is the property of SPCC who will safeguard its rights according to the civil and penal provisions of the Law.

- Consider fire potential from sparks.
- For bench applications, anchor small materials securely by mechanical means - **DO NOT HOLD**
- BY HAND. (Use vise grips or other suitable means.)
- For applications where a portable disc is applied to work or work is hand-fed into disc, avoid binding through misalignment.
- Consider the need for respiratory protection or ventilation systems.
- Face shields, Safety glasses, and ear protection are required when using disc grinders.

5.2.4 Handling and Storing

Handling Of Wheels

Grinding wheels shall always be handled with care. Wheels are fragile to a degree which varies according to the specification. Resinoid, and rubber, are more resistant to damage from handling than vitrified bonded wheels.

Often wheel breakage can be attributed to careless handling and storage wheels damaged from these causes may appear perfect yet represent a danger to operatives. Manufacturers inspect wheels prior to packing to ensure that they are despatched in perfect condition.

Make inspection of the grinder and cutting disc prior to carry out the job, as well as before storing it.

Before assembling the grinder disc, make sure that the number of RPM (Revolution Per Minute), indicated on the disc does not exceed the RPM specified by Manufacturer of the unit.

On receipt, they shall be inspected carefully to determine if they have been damaged in transit by means of a 'ring test'. This should be carried out as follows:

- Ensure that the wheel is dry and free from loose packing material, e.g. sawdust.
- Small wheels may be held by slipping one finger through the hole; the wheel shall be tapped gently using the wooden handle of a small tool such as a screwdriver.
- Heavy wheels shall be allowed to rest on edge in a vertical position on a clean hard floor and gently tapped with a wooden mallet.
- A clear ringing sound will be produced from crack-free wheels.
- Any wheel not responding to the tap with a clear 'ring' shall be examined for cracks, and in any event, returned to the manufacturer.
- All wheels do not produce the same tone when 'rung'.

This document is the property of SPCC who will safeguard its rights according to the civil and penal provisions of the Law.

Storing Of Wheels

All abrasive wheels must be stored in racks in a dry place and not subjected to extreme temperature changes. Wheels that shall be stored at a site of a machine, must be stored in a proper rack so as to prevent contamination and damage.

Wheels must be kept free from oil, grease and other contamination materials and substances.

Prior to mounting any abrasive wheel on the machine, it shall be cleaned thoroughly with a brush and examined for any possible signs of damage. Any wheel which is found to be damaged shall be rejected.

No wheel shall be mounted on a machine for which it is not intended. The wheel shall fit easily but loosely on the spindle. If it fits too tightly, the heat generated during the grinding operation may cause the spindle to expand and so crack the wheel.

To prevent the wheel coming off the spindle on which it is mounted, the wheel shall revolve in the opposite direction to the direction in which the nut securing the wheel on the spindle was tightened.

N.B. One exception to this rule is on tool and cutter grinding machines which have reversible direction spindles.

The nut on the spindle shall be tightened against the flange to hold the wheel sufficiently firmly to prevent slipping and to transfer driving torque.

“Over tightening” on spindles and flanges shall be avoided as it is possible to approach the ultimate crushing strength of the wheel.

5.2.5 Training Requirements

Essential training requirements for the mounting of an abrasive wheel as well as handling and using of these tools, shall include the following aspects, taking into account that training shall be carried out by qualified, experienced and certified personnel to train in the subject:

- Identification of Hazards arising from the use and handling of abrasive wheels and precautions that shall be observed and considered.
- Methods of marking and labelling abrasive wheels pertaining to their types and speed specification.
- Methods of storing, using, handling and transporting of abrasive wheels.
- Methods of inspecting and testing of abrasive wheels to identify existing damage.
- The functions of all components used with abrasive wheels including flanges, washers, bushes and nuts used in mounting.
- Knowledge of the correct and incorrect methods of assembling all components correct balancing, dressing and the adjustment of the “work rest” of abrasive wheels.
- The functions of associated components such as flanges, bushes, locking nuts etc.

This document is the property of SPCC who will safeguard its rights according to the civil and penal provisions of the Law.

PTTLNG Nong Fab LNG Receiving Terminal Project

SHE PROCEDURES

(HANDLING RADIOACTIVE SOURCE FOR X-RAY AND GAMMA RAY)

Doc. Class Z

This document is the property of SPCC who will safeguard its rights according to the civil and penal provisions of the Law.

Revision list:

Rev. Nr	Modifications:
R1	First Issue

TABLE OF CONTENTS

1 PURPOSE 144

2 REFERENCE 144

3 RESPONSIBILITIES 144

4 INTRODUCTION 147

5 PROCEDURE 149

5.1 Handling and Use 149

5.2 Personnel Protective Equipment 151

5.3 Health / Safety Limits and First Aid 151

5.4 Training 152

5.5 Storage 152

5.6 Source Removal / Replacement 153

5.7 Radiation Surveys 154

5.8 Personnel Monitoring 154

5.9 Reactor / Vessel Opening or Entry 155

5.10 Disposal and Transportation 155

6 EMERGENCY RESPONSE 155

6.1 Emergency Response Team 156

6.2 Emergency Actions 156

7 RECORDS 156

This document is the property of SPCC who will safeguard its rights according to the civil and penal provisions of the Law.

1 PURPOSE

The purpose of this procedure is to provide instruction for controlling Non Destructive Testing on site. This procedure applies to the use of both Radiographic and Non-Radiographic equipment.It covers the requirement for the safe handling and monitoring of all radioactive sources used at site and for protecting personnel from potential radiation hazards.

This procedure covers all activities requiring the use or handling of radioactive materials performed by Contractor and/or its subcontractors.

The control and management of radioactive source shall follow the local regulation.

2 REFERENCE

- STD-COR-HSE-005
- STD-COR-HSE-016
- "The ionising radiation's regulations 1985" - HMSO (SI 1985 No. 1333) or later;
- Radiation Safety Handbook – JSP 392 – Minister of Defense UK – www.mod.uk
- Regulation issue of Ministry of Welfare and Labour Protection, B.E. 2547 on Occupational Health and Safety Management: Ionizing Radiation Source (IR)
- Notification of Welfare and Labor Protection Department, sub: Predetermined of Radiation Exposure of Employee Reporting, dated 16 February B.E.2548
- Notification of Welfare and Labor Protection Department, sub: Predetermined of Radiation Source and Updating Reporting Format when Change the Radiation Source, dated 16 February B.E.2548

3 RESPONSIBILITIES

Contractor Project Manager Construction

The Project Manager Construction has the following responsibilities:

- ensure that all personnel, are fully informed of the hazards and procedures for safe handling of all hazardous materials which they may encounter in their work;
- ensure that adequate arrangements exist on site for the receipt and storage of radioactive sources;
- ensure that each Subcontractor who utilises radioactive materials shall keep the relevant Material Safety Data Sheets and shall make them available to the Contractor and Client.

Data sheets shall contain, as a minimum, the following information:

- Generic or Trade name and supplier;
- Chemical name;
- Appearance and physical properties;
- Usage;

This document is the property of SPCC who will safeguard its rights according to the civil and penal provisions of the Law.

- Important characteristic (incompatibilities);
- Threshold limit value (TLV);
- Safety hazards and precautions;
- Fire extinguishing agents and fire-fighting precautions;
- Health hazards, personal protection and First Aid precautions;
- Environmental hazards, precautions, spillage mitigation;
- Disposal options;
- Storage, packaging and labelling.

- ensure that all parties are informed in advance of activities involving radioactive sources;
- to issue the Permit to Work.

Contractor Field SHE Manager

The Contractor Field S H E Manager has the following responsibilities (that may be delegated to the Contractor Field SHE Supervisor):

- to check all barriers, lights and signs prior to winding out of the source;
- to ensure that the amount of radiation at the barriers is checked and that the measured level is <7.5 µSV (microsievert);
- to ensure that subcontractors are observing the site safety requirements with regard to storage, transportation and recording of data on Material Safety Data Sheets;
- periodically audit and evaluate safe work permits involving the use of radioactive sources to ensure appropriate completion;
- ensure that only employees who have received appropriate training participate in work activities involving radioactive sources;
- ensure that written operating and emergency procedures pertaining to radiation Safety are implemented, enforced, and made available in a conspicuous location;
- ensure radioactive source monitoring devices (film badges, thermo luminescent dosimeters) are returned as required by the Safety Section for processing and exchange;
- ensure that employees who have work activities involving radioactive sources receive a baseline medical exam prior to work, and anytime they are potentially overexposed to radioactive sources.

Contractor Welding Supervisor / Inspector

The Contractor Welding Supervisors/Inspectors have the following responsibilities:

- overall responsibility for the supervision of the Subcontractor in charge of using or handling the radioactive materials with particular regard to the allocation of work;
- shall ensure that all personnel performing the work and handling the radioactive materials are trained in these procedures.

This document is the property of SPCC who will safeguard its rights according to the civil and penal provisions of the Law.

Radiation Protection Supervisor (RPS)

The Radiation Protection Supervisor will be appointed by the Subcontractor in charge of using or handling the radioactive materials.

The duties of an RPS shall include, but not be limited to:

- monitoring of all worksites where ionising radiation's are utilised, to ensure the work is carried out in accordance with these regulations;
- randomly monitor on-site radiation work to ensure conformance to policies and regulations;
- formulation of procedures to be submitted to the Contractor Field HSE Supervisor and preparation of contingency plans to ensure safe working practices and adequate emergency response;
- training and monitoring of all workers exposed to ionising radiation, to ensure they perform their assigned work without endangering themselves, other workers and the environment;
- implementation of adequate dosimetry control (film badges, thermo luminescent dosimeters, finger rings or wrist badges), for the work being performed and maintenance of the relevant records;
- provide technical assistance to all employees on radiation Safety issues;
- organisation of comprehensive medical screening, of all workers exposed to ionising radiation and maintenance of the relevant medical records;
- implementation of a comprehensive system of movement control of all sources of ionising radiation imported, such that their location is known at all times;
- ensuring that all sources of ionising radiation are stored and transported in accordance with these regulations, such that they do not present a danger to the population, animal life or the environment;
- monthly inspect installed radioactive sources in fixed process applications, and create a documented inspection file;
- stop any type of work which he deems is being performed unsafely;
- determine the area to be barricaded off during work operations involving radioactive sources;
- survey the area where work involving radioactive sources is taking place to ensure that an allowable level of radiation is not exceeded;
- provide technical assistance to concerned Supervisors and emergency responders on radiation issues;
- maintain a record of isotopes, containers, monitors, etc.;
- maintain a register of Company classified persons and keep a record of their dose;
- investigation and reporting to the Contractor Field S H E Manager / S H E Supervisor of all incidents involving over-exposure to ionising radiation;
- investigation and reporting to the Contractor Field S H E Manager / S H E Supervisor of all incidents involving the loss (even temporary) of a source of ionising radiation.

This document is the property of SPCC who will safeguard its rights according to the civil and penal provisions of the Law.

While the permanent presence of the RPS is not required at the worksite, he shall be available at all times to deal with any abnormal situation which may occur.

Subcontractor in charge of using or handling radioactive materials
Prior to entering site the Subcontractor will provide the following information:

- certificate containing source details including decay table, serial number, type and half life;
- transportation details with source container serial number and certificate;
- wind out equipment certification;
- calibrated, tested and certified monitoring equipment;
- sufficient barriers, signs and warning lights;
- emergency handling equipment and working rules;
- nomination of competent supervisor;
- medical and Dosimetric check register for all nominated personnel;
- training records and certificates for all nominated personnel.

4 INTRODUCTION

Over-exposure during radiography occurs primarily as the result of failure to monitor Sources properly, the improper handling of sources, faulty or badly maintained Equipment, and poor communications or poor facilities. The precautions set out in this Part will ensure personnel involved in radiography are provided with a safe working environment.

DEFINITIONS

As Low As Reasonably Practicable (ALARP) - the concept to control employee exposure to radiation as low as reasonably possible.

Classified Worker - individual who is involved in the use of radioactive sources and or the operation of radioactive source equipment; who has received the appropriate radiation Safety training; who wears dosimetry; and is under a medical surveillance program.

Dose - quantity of ionising radiation absorbed, per unit of mass, by the body or by any portion of the body.

Dosimeter - a device used to measure an accumulated dose of or exposure to radiation; in common usage it is a pencil size pocket chamber, film badge, or a solid state type of detector.

This document is the property of SPCC who will safeguard its rights according to the civil and penal provisions of the Law.

Ionising Radiation - includes alpha, beta, gamma, and x-rays, but does not include sound or radio waves, visible light, or infrared or ultraviolet light.

Maximum Allowable Dose Rate - the internationally recognized maximum dose rate to which the unprotected worker may be exposed equivalent to 0.75 millirem per hour (7.5 µSv /hr).

Bequerel - the basic unit of measurement of radioactivity.

Curie - a commonly used measurement of radioactivity (iCi = 3.7 10^{10}).

Grey - a measure of radiation field intensity in the air.

Wipe Test - a periodic leakage test carried out on every source at intervals of 6 months.

Source - radioactive element encased in a lead line steel enclosure.

Shield - a movable lead shield which is an integral part of the source used to isolate the radioactive element.

Sievert - a measure of dose of any ionising radiation to body tissue.

Controlled Area - any area which is controlled by the users of ionising radiation for the purposes of protection of individuals from exposure to radiation and radioactive material, where the dosi rate is likely to exceed 2.5 µSv for members of the public and 7.5 µSv /hr for Industrial workers.

Radioactive Material - material which emits by spontaneous nuclear disintegration, corpuscular or electromagnetic emmission.

Field Intensity - the best method of determining the radiation of field intensity is by measurement with survey meter. The field intensity can be calculated fairly and accurately by using the formula as per chapter 6.

CND – not destructive control carried out using radioactive source to give out ionizing radiation as x-rays, gamma rays

Subcontractor – Any subcontractor in charge of using or handling radioactive materials

This document is the property of SPCC who will safeguard its rights according to the civil and penal provisions of the Law.

5 PROCEDURE

For operations involving radioactive sources the following applies:

- Application will initially be made to the Contractor Construction Manager 24 hours in advance for carrying out radiographical operations by using the dedicate Permit to Work (PTW) form. (reference to Permit to Work procedure)

Authorisation will be contingent on the following:

- Exact Location;
- Start and finish time;
- Adjacent Operations.

When authorisation has been granted the Welding Supervisor/QAS will notify all contractors giving them at least 12 hours notification.

The Subcontractor in charge of handling or using radioactive sources will sign the PTW confirming that he knows all precautions to be observed prior to commencement of radiography.

The Subcontractor will barrier off the area and check to ensure that all personnel have been vacated from inside the barriers.

A wind out test may be required at the discretion of the Contractor HSE Supervisor to ensure that barriers have been erected at a safe distance.

When all the above has been carried out radiography may proceed.

On completion of the work the subcontractor will return the source to its storage area and remove all barriers and equipment.

The Radiography Application will be returned to the Welding Supervisor/QA-QC who will keep a file of all Radiography Applications.

5.1 HANDLING AND USE

Radioactive sources shall only be brought into worksites for specific operations with the approval of the RSO.

Only experienced and trained employees shall be permitted to directly interact with radioactive sources or equipment.

Such employees shall be defined as "Classified Workers" and carry identification as such.

All radioactive source equipment operators shall only operate equipment in accordance with specific manufacturer and operating procedures.

This document is the property of SPCC who will safeguard its rights according to the civil and penal provisions of the Law.

The Contractor Construction Manager in agreement with the Contractor Field HSE Manager shall approve any deviation from normal operating practices.

No employee shall pass or bypass a Safety device barrier or interlock unless such individual is a “Classified Worker”.

In the event a Safety device or interlock has been bypassed, a readily discernible sign bearing the words "SAFETY DEVICE NOT WORKING", or words having a similar intent, shall be placed on the radioactive source equipment housing; the area at risk of effects from the radiation source shall be clearly identified and fenced to avoid accidental access of unauthorised personnel.

Repair or modifications to any radioactive source equipment shall only be performed by qualified personnel and only after ensuring the equipment is entirely de-energized and locked/tagged out to prevent accidental start-up.

Radioactive source equipment shall be secured to prevent unauthorized use when authorized operators are not in physical attendance.

Radioactive source equipment shall not be transferred to other organizations or individuals.

The Contractor Project Manager Construction shall be immediately notified of any radioactive source equipment reported missing.

The position where the source is to be used shall be roped and marked with warning signs not less than 20 meters apart around a perimeter at which the maximum rate does not exceed 0.75 mr/hr (7.5 µSv /hr).

Installed radioactive sources in fixed process applications shall be inspected at a frequency determined by the RPS through monitoring histories.

For each installation, an inspection file shall be maintained with inspection reports initiated by the RPS.

Sources shall be transported in properly shielded containers and carried in vehicles with the appropriate hazard warning signs.

Prior to the use of the source, a Radiography Permit shall be obtained.

The X-ray equipment may be kept in the Maintenance Workshop area when not in use, subject to approval of the Contractor Project Manager Construction.

This document is the property of SPCC who will safeguard its rights according to the civil and penal provisions of the Law.

5.2 PERSONNEL PROTECTIVE EQUIPMENT

The following personnel protective equipment shall be used by personnel handling radioactive sources:

- Body - Approved lead lined/coated aprons;
- Hands - Approved lead lined/coated hand gloves;
- Face/Eyes - Approved radiation resistant goggles and face shield;
- Arms - Approved lead lined/coated arm sleeves.

5.3 HEALTH / SAFETY LIMITS AND FIRST AID

Employees shall not be exposed to greater than 0.75 millirem/hour (7.5 µSv/hr).
The maximum permissible emergency level shall be determined by the Contractor Field SHE Manager (or SHE Supervisor) in agreement with the RPS.

No employee shall receive in any calendar quarter a dose of radiation in excess of the following:

- Whole body, head and trunk, active blood forming organs, lens of eyes, or gonads - 1.25 rems (1,250 mrems or 12.5 Sv);
- Hands and forearms, feet and ankle - 18.75 rems (18,750 mrems or 187.5 Sv);
- Skin of whole body - 7.50 rems (7,500 mrems or 75 Sv).

Employees exposed to a dosage of more than 3 rems/calendar quarter shall be referred to a hospital for a medical check up, and advised to stay away from radiation exposure for at least a period determined by RPS in respect of the age or the person and the dose received.

If a person receives more than 1.25 rems (12.5 Sv) per calendar quarter, the Contractor Field SHE Manager and the subcontractor's Project Manager must be immediately informed.

Any area where an individual, if continuously present, can receive a dose in excess of 0.75 millirem (7.5 µSv /hr) must be treated as restricted area and access strictly controlled.

Radioactive sources are only brought into the plant for a specific operation or operations.

If the radiation source is stored in the plant, storage shall be done in accordance to the local and project requirements and international regulations.

Employee's clothing which is contaminated with radioactive material shall be placed in a sealed container for disposal by a licensed vendor.

This document is the property of SPCC who will safeguard its rights according to the civil and penal provisions of the Law.

Employee's skin which becomes contaminated shall be thoroughly washed and checked for continued contamination.

5.4 TRAINING

Employees shall not be permitted to operate radioactive source equipment without receiving training developed and conducted by the RPS covering the following:

- identification of radiation hazards associated with the equipment;
- significance of the various radiation warning, Safety devices, and interlocks incorporated into the equipment, or the reasons they have not been installed on certain pieces of equipment and the extra precautions required in such cases;
- hazards of overexposure;
- how to control exposure (time, distance, shielding);
- proper operating procedures for the equipment;
- recognition of symptoms of an acute localized exposure;
- proper procedures for reporting an actual or suspected exposure.

5.5 STORAGE

Radioactive sources shall be stored according to the regulations in force in the country and the following general precautions shall be taken.

The source in a shield container shall be received under the supervision of the RPS by a qualified and licensed vendor.

The source shall be monitored before and after handling by the RPS using radiation meters to ensure the isotope has been returned to the container.

Employees handling the source within the shield container shall wear personal protective equipment.

The RPS shall compute the safe distance necessary from the source.

Accordingly, all employees shall be evacuated to the safe distance.

Safe distance in meters shall be computed with the following formula:

$$\sqrt{\frac{1{,}000 * K * Ci}{0.75}}$$

where:

K = Ir^{192} 0.48
Co^{60} 1.33
Yb^{169} 0.30

C_i = Source strength in Curies

This document is the property of SPCC who will safeguard its rights according to the civil and penal provisions of the Law.

The source shall be stored in a location designated by the RPS.

The source storage location shall have a fire resistant door secured with a lock, and the storage location will be periodically inspected to insure safe protection of the source.

The perimeter of safe distance from the source shall be barricaded, and radiation hazard signs shall be posted on all sides by the RSO.

The storage location shall be away from populated areas, including accommodation camps.
Clear signs indicating the presence of “Radioactive Materials” both in English and in Arabic (local languages on the worksite) shall be installed in correspondence of the storage location.

The dose rate outside the storage facility shall not exceed the 2.5 µSv /h.

The RPS will ensure the source is store in the designated safe storage area.

Log book to be maintained to record the movement in and out of the source from the storage pit.

5.6 SOURCE REMOVAL / REPLACEMENT

The RPS shall notify the Subcontractor Construction Manager of plans to remove a radiation source.

The RPS will place the source in the "store" position.

He will lock it in this position with the appropriate lock and tag with a "Danger Do Not Open" tag.

The RPS will carry out a field radiation survey to ensure it is safe to remove the source.

The removal will be carried out monitoring the personnel exposure by means of a dosimeter and any exposure will be recorded by the RPS.

The source removal operations will be carried out under the direction of the RPS.

After the source is installed, the RPS will remove its tag and lock and switch the source in the operating position.

The RPS will then carry out a field radiation survey to ensure that any stray radiation is at an acceptable level.

NOTE: the radioactive source locks will be individually marked for a particular source and will be issued by the RSO. Multi locks adapters will not be used on radiation sources.

This document is the property of SPCC who will safeguard its rights according to the civil and penal provisions of the Law.

5.7 RADIATION SURVEYS

The RSO shall perform radiation surveys on all radioactive source equipment as follows:

- upon installation of the equipment, and at a frequency determined by the RSO but not to exceed quarterly;
- following any change in the initial arrangement, number or type of components in the system;
- following any maintenance requiring the disassembly or removal of a component in the system;
- during the performance of maintenance and alignment procedures;
- any time a visual inspection of the components in the system reveals an abnormal condition;
- whenever personnel monitoring devices show a significant increase over the previous monitoring period or the readings are approaching the limits for a restricted area.

Records of these evaluations shall be maintained for a period of at least 2 years after the evaluations.

Radiation survey instruments shall be calibrated in accordance with the following:

- at intervals not to exceed 6 months and after each instrument servicing or as recommended by the manufacturer;
- at energies and radiation levels appropriate for use;
- so that accuracy is within plus or minus 10 percent of the true radiation level;
- by an agency with traceability to International Standards;
- calibration records shall be maintained for a period of 2 years after the calibration date.

5.8 PERSONNEL MONITORING

Employees who are exposed to radioactive hazards (i.e., classified personnel) shall be required by their Supervisors to wear either a film badge or a thermo luminescent dosimeter for recording radiation dose to the whole body and a ring or wrist badge for recording extremity dose.

The RPS shall control the issuance and reading of these devices.

The RPS shall be immediately notified if these devices are lost or accidentally exposed; and shall inform the Contractor Construction Manager and the Contractor Field SHE Manager.

These devices shall be returned upon the request of RPS.

Radioactive exposure results shall be reviewed by the RPS for compliance with regulatory requirements and to ensure radioactive exposure is ALARP.

This document is the property of SPCC who will safeguard its rights according to the civil and penal provisions of the Law.

5.9 REACTOR / VESSEL OPENING OR ENTRY

Before opening or entering a reactor or vessel refer to the Contractor standard and procedures for Vessel Entry Work Permit.

This procedure must be strictly adhered.

Operation personnel will notify the RPS of plans to open Reactor or Vessel containing the radioactive material before issuing the Work Permit.

The RPS will withdraw the radioactive sources and place the source shields in the "store" position, and lock them in this position.

He will also tag them with a "Danger Do Not Operate" tag.

When the reactor or vessel is opened, the RPS will carry out internal radiation survey to ensure that the ambient radiation is below the maximum allowable level.

If the ambient radiation is safely below the maximum allowable level, then entry will be unrestricted.

When the work is completed and the reactor closed, production will notify the RPS who will remove his tag and locks and place the sources in the operating position.

The RPS will carry out a field radiation survey to ensure that the ambient radiation is at an acceptable level.

5.10 DISPOSAL AND TRANSPORTATION

Disposal and transportation of radioactive sources shall be monitored by the RPS.
Spent radioactive sources shall be returned to the manufacturer.
A closed van shall be used to transport radioactive sources with proper warning signs attached.
RPS shall accompany the radioactive material being transported to and from the airport on company vehicles.

6 EMERGENCY RESPONSE

All Subcontractors involved in the use of ionising radiation's shall prepare formal contingency plans to deal with any emergency which might arise from the storage, transportation or use of ionising radiation.

Such plans shall include. but not be limited to dealing with the following emergencies:

- accidental overexposure to ionising radiation;
- loss or theft of a source of ionising radiation;
- vehicular accident involving transport of sources of ionising radiation;
- accidental separation of a chemical source from its shielding;
- physical damage to a sealed source, causing possible leakage of radioactive material;

This document is the property of SPCC who will safeguard its rights according to the civil and penal provisions of the Law.

- contamination of the environment with radioactive material.

Such contingency plans shall be forwarded to the Contractor.

6.1 EMERGENCY RESPONSE TEAM

The emergency response team shall:

- be aware of the location of all installed radioactive sources and of emergency action to be taken in the event of accidental mechanical or fire damage to the source;
- seek the technical assistance (i.e., monitoring) in the event of a fire or incident involving a radioactive source from the RPS (or substitute) to safeguard personnel as necessary.

6.2 EMERGENCY ACTIONS

Any loss of, breakage of, or damage to any sealed source of radioactive material shall be treated as an emergency.

In this event, the RPS shall:

- direct all personnel to leave the danger area;
- erect barriers and notices at the perimeter of the danger area;
- notify the Fire Section and / or Emergency Response Team;
- contact the nearest qualified Radiation Centre and obtain technical assistance in recovering the source, and for disposal.

RPS is immediately informed in case of any alarm indicating high radiation, for him to take necessary action.

7 RECORDS

The RPS shall:

- maintain calibrated radiation monitoring equipment;
- maintain the calibration records for 2 years after the calibration date;
- maintain the Personal Dosimeter (TLD) results for concerned employees.

This document is the property of SPCC who will safeguard its rights according to the civil and penal provisions of the Law.

PTTLNG Nong Fab LNG Receiving Terminal Project

SHE PROCEDURES
(HEAT STRESS PREVENTION)

Doc. Class Z

This document is the property of SPCC who will safeguard its rights according to the civil and penal provisions of the Law.

Revision list:

Rev. Nr	Modifications:
R1	First Issue

TABLE OF CONTENTS

1 PURPOSE 159

2 REFERENCE DOCUMENTS 159

3 RESPONSIBILITIES 159

4 INTRODUCTION 159

4.1 COMMON HAZARDS 159

4.2 NEW EMPLOYEES 160

4.3 CURRENT EMPLOYEES 161

4.4 IDENTIFICATION OF HEAT STRESS SYMPTOMS 161

4.5 GENERAL 162

5 DISCRIPTION OF SAFETY PRECAUTIONS 162

5.1 GENERAL PREVENTATIVE MEASURES 163

5.2 APPARENT TEMPERATURES 164

5.3 FLUID INTAKE 164

This document is the property of SPCC who will safeguard its rights according to the civil and penal provisions of the Law.

1 PURPOSE

To establish requirements and guidelines for Heat prevention and a minimum standard of training necessary to ensure personnel understanding and compliance with the program. The goal is to achieve 100% protection to all personnel exposed to heat on the site. This procedure applies to all personnel, including subcontractors and visitors to the project.

2 REFERENCE DOCUMENTS

- STD-COR-HSE-016
- STD-COR-HSE-005

3 RESPONSIBILITIES

- Site Management and Front Line Supervision Support (Contractor and subcontractors)shall implement this program to all personnel and ensure 100% compliance.
- Safety Department

Supports the crafts ownership of the program and assists in any training deemed necessary to ensure personnel have sufficient understanding of the program for successful compliance.

4 INTRODUCTION

HEAT STRESS is usually the result of work being performed at elevated temperatures. Contributory factors may also include a decrease of natural body ventilation by protective clothing e.g. chemical & impervious suits.

NOTE: *if the body's physiological processes fail to maintain a normal body temperature because of excessive heat, a number of physical reactions can occur ranging from mild (such as fatigue, irritability, anxiety, and decreased concentration, dexterity, or movement) to fatal. Because heat stress is one of the most common and potentially serious illnesses that construction workers encounter, in areas where high temperatures are normally encountered, regular monitoring and other preventative measures are vital.*

4.1 COMMON HAZARDS

Your body operates in a narrow temperature range. When the environment is too cold or too hot the body will cease to function properly if steps to control the exposure are not taken. Extremes in body temperature elevation can be life threatening.

This document is the property of SPCC who will safeguard its rights according to the civil and penal provisions of the Law.

There are many factors that affect body temperature. Some of these that can cause elevated body temperature are listed below:

- Lack of proper fluid replacement.
- Electrolyte imbalance.
- Extreme air temperature.
- Lack of air movement – oven effect.
- Reflected heat or sunrays.
- Being in the direct sun (can raise temperature by as much as 15 degrees).
- Convection of heat through walls or steel.
- Prolonged or strenuous activities.
- High humidity.
- Medications, diet, excess salt intake.
- Physical fitness (lack of, weight, acclimatization).
- Excessive or layered clothing.

4.2 NEW EMPLOYEES

The first step in managing heat stress is to determine if the new employee is used to working in the heat. A person who is not used to working in high heat conditions cannot be expected to perform, as an acclimatize employee would be able to perform.

The new employee must be introduced to the new environment carefully. The tasks assigned must take into account the persons abilities, strength, and acclimatization. Prolonged strenuous activity or exposure to extreme heat must be limited by rotating employees until all are accustomed to the new environment. A normal acclimatization process takes 2-3 weeks to complete before the employee is comfortable working in high heat environments. The supervisor (Contractor and subcontractor) is the essential person to provide an acceptable acclimatization period with appropriate tasks to ensure the safety of the new employee.

Several factors will give a supervisor clues as to whether a new employee will acclimatize quickly or not.

- Physical Fitness – A fit person will generally have a higher heat tolerance and acclimatize sooner.
- Previous Experience – Someone who has worked in a high heat environment either will be acclimatized or will have a better knowledge of how to acclimatize himself.
- Fluid Intake/Breaks – A person who works steady with regular breaks will acclimatize quicker than someone who will takes sporadic and more frequent breaks.
- Attitude – A new employee who is eager and not worried about working in the heat will acclimatize more quickly than someone who is anxious when working in hot environments will. Care must be taken with the eager employee because he may push himself too much and too quickly.

This document is the property of SPCC who will safeguard its rights according to the civil and penal provisions of the Law.

4.3 CURRENT EMPLOYEES

This group is generally more susceptible to heat stress than some of the new employees. These employees are already acclimatized and feel that they are able to "handle the heat" or they are introduced to the heat for the first time of the season, and feel that they are fine when, in fact, they are not. Most feel that they can do more than they really are able to do, or are trying to complete a task before taking their break.Sometimes the experienced employee is trying to show the new employee "how to do it" and is caught doing more than he should.Awareness and education is the tool to keep the current employee out of trouble.

4.4 IDENTIFICATION OF HEAT STRESS SYMPTOMS

Many heat stress management programs focus on the identification of heat illnesses. While the ability to identify the particular heat stress problem is important, it is far more important to never reach the need to identify which particular heat related problem is being experienced. There are many publications, which we all should have, available to identify the various levels of heat stress symptoms. This procedure will focus on the prevention of heat related illnesses. The following information targets identification of initial symptoms of heat stress before problems occur.

Types of heat stress

Heat Stroke

Heat stroke is an acute and dangerous reaction to heat stress caused by a failure of the heat regulating mechanisms of the body, e.g. a break down of the employee's temperature control system that causes sweating. Body temperature rises so high that brain damage and death will result if the person is not cooled quickly.

Symptoms

Red, hot, dry skin, although the person may have been sweating earlier; nausea; dizziness; confusion; extremely high blood pressure, rapid respiratory and pulse rate; unconsciousness or coma.

Actions

Casualty must be cooled down and Medical aid sought immediately with the person transported to the site medical facilities.

Heat Exhaustion

This document is the property of SPCC who will safeguard its rights according to the civil and penal provisions of the Law.

Heat exhaustion is a state of very definite weakness or exhaustion caused by the loss of fluids from the body. This condition is much less dangerous than heat stroke, but must be treated early on to prevent eventual deterioration to heat stroke.

Symptoms

Pale, clammy, moist skin, profuse perspiration, and extreme weakness. Body temperature is normal, pulse is weak and rapid, breathing is shallow.The person may have a headache, may vomit, may be dizzy.

Heat Cramps

Heat cramps are caused by perspiration that is not balanced by adequate fluid intake.

Heat cramps are often the first sign of a condition that can lead to heat stroke.

Symptoms

Acute painful spasm of voluntary muscles; e.g., abdomen and extremities.

Heat Rash

Heat rash is caused by continuous exposure to heat and humid air and aggravated by chafing clothes. The condition decreases ability to tolerate heat.

Symptoms

Mild red rash, especially in areas of the body in contact with protective gear.An alert supervisor will know his employees faces. Heat stress shows early in the face as being tired, very profuse sweating, off-color, and sometimes confusion. Employees that are found with any of these symptoms should be taken to a cool location before a problem occurs.

4.5 GENERAL

All of the above conditions must be reported to the medical centre and treated as soon as possible, medical staff will send regular communication on the subject of heat stress and inform management of any concerns.

The contents of this procedure will be communicated and emphasised to site supervision during training sessions and at the contractors regular safety meetings.

5 DISCRIPTION OF SAFETY PRECAUTIONS

The best measures to prevent heat stress are to address it before it ever becomes a problem. Anticipate high heat days through weather forecasts and prepare for them with proactive

This document is the property of SPCC who will safeguard its rights according to the civil and penal provisions of the Law.

measures. The following are a few recommendations to aid in the prevention of heat related problems:

a) Begin drinking fluids early in the day – waiting until the hottest portion of the day to replenish body fluids is too late. Avoid caffeine and alcohol the night before and during the day.
b) Dress for the conditions. Lightweight, loose clothing is best. Avoid layering clothing underneath coveralls.
c) A well balanced diet will help. Heavy, fatty foods do not support the body well in high heat conditions. Fruits, vegetables, proteins, and starches work best.
d) Electrolyte solutions help to maintain energy levels. Do not drink more electrolyte solution than water. Avoid taking salt tablets unless directed to do so by your doctor.
e) Use sunscreen and cover your face and neck from the sun.
f) Provide shaded areas for mini-breaks, and water stations, as much as possible when there is no existing shaded structures.
g) Strongly encourage short (1-2 minutes) water breaks every 20-30 minutes during high heat conditions.
h) Provide specially marked water barrels containing ice and water for soaking neck towels, arms, sleeves, bandannas, etc.
i) Make available the bandannas that can be refrigerated during the night and soaked in cold water during the day. (Magic Bandanna, Cool Bandanna, etc.)
j) Provide specific areas for employees to go on a scheduled basis and cool off when working in full sun areas. These would be considered mandatory breaks (In addition to the short water breaks). This should be done every 1 to 1 ½ hours. Fans and sitting areas should be provided so those employees can sit with their coveralls unzipped and cool down. This break should be 10 -20 minutes in length.
k) Using a thermo scan type instrument, monitor personnel in their work areas to assure that there are not any consistently high core body temperature problems. Core body temperature should never exceed 101 degrees. Pay particular attention to areas that have restricted airflow such as confined space, foundations, excavations, and vessels.
l) Monitor work areas for ambient temperatures. Use the heat index chart to determine the apparent temperature. Areas with apparent temperatures over 95 degrees should be monitored for personnel problems. Begin providing extra measures for the workers.

5.1 GENERAL PREVENTATIVE MEASURES

Employees must have access to cool portable water at their place of work. Water coolers and paper cups will be provided for all crews. Shaded areas will be provided for rest periods and instructions given to workers that resting adjacent to, or under plant and equipment is strictly prohibited.

First Aid equipment provided on site will include treatment for dehydration e.g. electrolytes, salt tablets(if advised by doctor).

This document is the property of SPCC who will safeguard its rights according to the civil and penal provisions of the Law.

5.2 APPARENT TEMPERATURES

The apparent temperature is the combined index of heat and humidity, or what it really feels like to the body.Using the apparent temperature as a guide, prevention measures are enacted when specified apparent temperatures are reached. Three stages are used to determine what action is to be taken.

Listed below is a matrix of recommended actions to be taken when specific apparent temperatures are reached.

PROACTIVE MEASURE MATRIX

Apparent Temperature	90-96 (32°-35°C) Level One	97-104 (36°-40°C) Level Two	105-115 (41°-46°C) Level Three
Proactive Measures From Section #5	A, b, c, d	A, b, c, d, e, f, g, h, I	A, b, c, d, e, f, g, h, I, j, k, l
Water Intake	1-2 cups each 20-30 min	2-4 cups each 15-25 min.	4-6 cups each 15-20 min.
Breaks	Frequent 1-2 min. water breaks plus 15 min. cool down breaks shade / fans	Frequent 1-2 min. water breaks plus 15-20 min. cool down breaks shade / fans	Frequent 1-2 min. water breaks plus 15-20 min. cool down breaks shade / fans
Fluid Supplies	Begin to provide electrolyte solution	Provide electrolyte solution and more than adequate supply of water	Provide more than adequate water and electrolyte solution. Strongly encourage frequent short breaks.

5.3 FLUID INTAKE

High apparent temperatures can cause the body to lose large amounts of fluid through sweating. This fluid loss must be replaced to maintain normal bodily functions.

The chart below shows the effect of fluid loss in terms of weight.You can see that there is a noticeable change when fluid loss occurs.

Weight Loss Examples (Pounds)

Beginning Weight	Weight at 1% Loss	Weight at 2% Loss	Weight at 2.5% Loss
150	148.5	147	146.3
175	173.3	171.5	170.6
200	198.0	196.0	195.0
225	222.8	220.5	219.4

This document is the property of SPCC who will safeguard its rights according to the civil and penal provisions of the Law.

The chart shows the recommended amounts of fluid intake. As the temperature increases, the fluid intake should increase accordingly. Electrolyte solutions are beneficial in the fight against heat stress. Water is the essential ingredient and the worker should never drink more electrolytes than water. A good rule of thumb is to drink 2-3 glasses of water to one glass of electrolyte solution.Do not wait until the temperature gets high to begin replacing fluids.

The body can absorb and store excess amounts of fluids. Begin drinking water early in the day to establish a “store” of extra fluid for use when the heat rises. This will help to prevent attempts to “catch up” by drinking large amounts of water when it gets really hot. Trying to catch up does not work.
You must replace the fluids in a fashion, which keeps the fluid intake slightly ahead of the fluid loss. Drinking large amounts of fluids in an attempt to catch up can cause stomach cramps, which will cause the person to vomit most of the time.Strongly encourage short, frequent water breaks in anticipation of high heat workdays.

General Heat Stress Index		
Danger Category	**Heat Index**	**Heat Syndrome**
IV. Extreme Danger	> 54	Heat Stroke or sunstroke imminent
III. Danger	39-53	Sunstroke, Heat Cramps, or Heat Exhaustion likely. Heat Stroke possible with prolonged exposure and physical activity.
II. Extreme Caution	32-38	Sunstroke, Heat Cramps, or Heat Exhaustion possible with prolonged exposure and physical activity.
I. Caution	27-31	Fatigue possible with prolonged exposure and physical activity.

***Note: Degree of heat stress may vary with age, health, and body characteristics**

		Relative Humidity								
		10%	**20%**	**30%**	**40%**	**50%**	**60%**	**70%**	**80%**	**90%**
Air Temp °C	**50**	**44**	**52**	**54**	**>54**	**>54**	**>54**	**>54**	**>54**	**>54**
	49	**43**	**51**	**54**	**>54**	**>54**	**>54**	**>54**	**>54**	**>54**
	48	**43**	**50**	**53**	**54**	**>54**	**>54**	**>54**	**>54**	**>54**
	47	**42**	**48**	**52**	**54**	**>54**	**>54**	**>54**	**>54**	**>54**
	46	**41**	**47**	**50**	**54**	**>54**	**>54**	**>54**	**>54**	**>54**
	45	**41**	**46**	**50**	**54**	**>54**	**>54**	**>54**	**>54**	**>54**
	44	**40**	**45**	**49**	**54**	**>54**	**>54**	**>54**	**>54**	**>54**
	43	**39**	**44**	**48**	**54**	**>54**	**>54**	**>54**	**>54**	**>54**
	42	**38**	**43**	**46**	**54**	**>54**	**>54**	**>54**	**>54**	**>54**
	41	**38**	**41**	**45**	**52**	**54**	**>54**	**>54**	**>54**	**>54**
	40	**37**	**40**	**43**	**49**	**54**	**>54**	**>54**	**>54**	**>54**

This document is the property of SPCC who will safeguard its rights according to the civil and penal provisions of the Law.

	39	36	38	42	47	52	54	>54	>54	>54
	38	35	37	41	43	49	54	>54	>54	>54
	37	34	36	38	41	43	54	54	>54	>54
	36	33	35	37	40	42	49	53	54	>54
	35	32	34	36	39	42	46	52	54	>54
	34	32	34	35	38	41	44	50	53	54
	33	31	32	33	36	38	41	46	50	53
	32	29	31	32	33	36	38	41	46	50
	31	28	30	31	32	34	35	38	41	46
	30	27	29	29	31	32	33	36	38	43
	29		27	28	29	30	32	33	35	37
	28			27	27	29	30	32	33	35
	27					27	28	29	30	32
	26						27	27	28	29

This document is the property of SPCC who will safeguard its rights according to the civil and penal provisions of the Law.

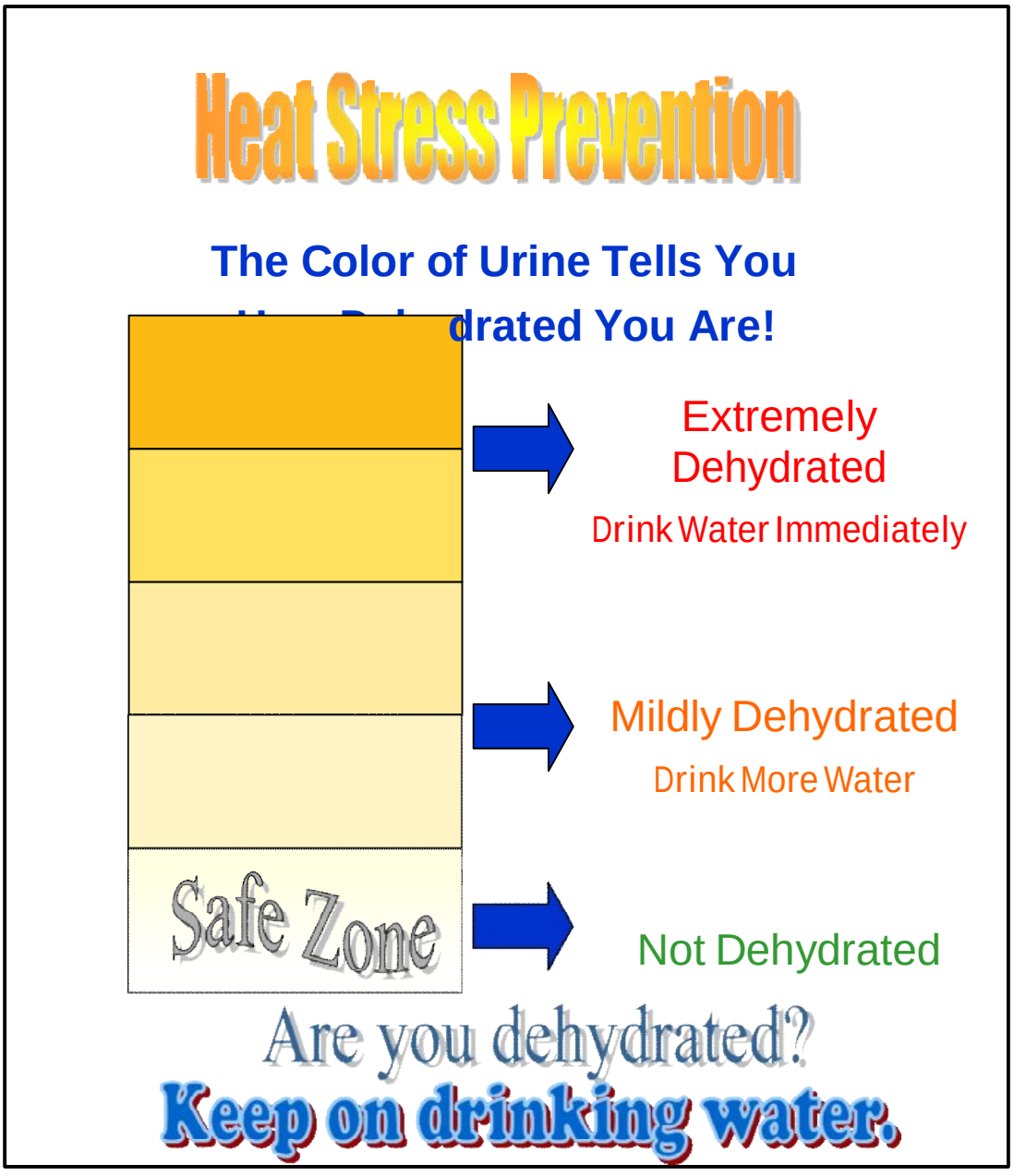

This document is the property of SPCC who will safeguard its rights according to the civil and penal provisions of the Law.

PTTLNG Nong Fab LNG Receiving Terminal Project

SHE PROCEDURES (HOUSEKEEPING)

Doc. Class Z

This document is the property of SPCC who will safeguard its rights according to the civil and penal provisions of the Law.

Revision list:

Rev. Nr	Modifications:
R1	First Issue

TABLE OF CONTENTS

1 PURPOSE 170

2 REFERENCE DOCUMENTS 170

3 RESPONSIBILITIES 170

4 INTRODUCTION 171

5 DISCRIPTION OF SAFETY PRECAUTIONS 171

5.1 WASTE MATERIAL SEGRAGATION 172

5.2 INSTRUCTIONS 173

This document is the property of SPCC who will safeguard its rights according to the civil and penal provisions of the Law.

1 PURPOSE

To establish requirements and guidelines for managing the housekeeping operations during the construction activities of an onshore project on site and a minimum standard of training necessary to ensure personnel understanding and compliance with the program. This procedure applies to all personnel, including subcontractors and visitors to the project.

2 REFERENCE DOCUMENTS

- STD-COR-HSE-016
- STD-COR-HSE-005

3 RESPONSIBILITIES

Housekeeping is the responsibility of all site personnel, and line management commitment will be demonstrated by the continued efforts of supervising staff towards this activity.

The Field HSE Manager ensures the following:

- that suitable arrangements, are in place to maintain site tidiness to a high standard;
- to monitor daily site conditions and ensure that any remedial actions are implemented through his organization;
- shall engage a separate contractor, if necessary, to remove waste material including arrangements for specialised or hazardous waste;
- shall satisfy himself that waste material removed from site is reaching the landfill area or incineration facility, and is not being 'fly tipped' or causing environmental damage.

Subcontractors, including their sub-subcontractors are wholly responsible for the maintenance of site housekeeping, specifically they will:

- assign responsibility within their organisation for the control and elimination of waste materials;
- monitor the arrangements in place for controlling housekeeping, for effectiveness;
- have an authorized waste material track system that give evidence of waste material typology and quantity sent to the segregation areas for disposal;

Housekeeping is the act of keeping the working environment cleared of all unnecessary waste, thereby providing a first-line of defence against accidents and injuries.

This document is the property of SPCC who will safeguard its rights according to the civil and penal provisions of the Law.

4 INTRODUCTION

Good Housekeeping is one of the basics of preventing many health and safety problems. It shall therefore be one of the primary concerns of all Contractor and Subcontractor Management and supervision.

Housekeeping activities shall be undertaken on a planned and scheduled basis from the beginning of the job, and carefully supervised. Where necessary to remove wastes dedicated personnel shall be employed.

A sufficient number of suitable trash containers shall be provided at various locations throughout the work site with clear colour code system for all trash containers. All containers shall be regularly removed and emptied, and as a minimum at the end of each shift.

5 DISCRIPTION OF SAFETY PRECAUTIONS

- All onshore construction areas shall maintain the highest possible standard of housekeeping. High standards contribute to safe working conditions, while poor housekeeping is one of the major causes of incidents.

- The work place should be tidy before beginning a task, at the end of shifts and on completion of the task. This should be specified on the Work Permit.

- Floors will be kept free from oil, grease and other slippery substances and kept clean at all times. Staircases, gangways, passages and doorways shall be kept clear of obstructions. All handrails, safety railings and netting should be kept in good repair.

- Toe boards shall be fitted to all overhead platforms, gangways, scaffolding and work places, etc to prevent articles from falling or rolling off. 6. Suitable receptacles should be provided for the collection of solid and liquid Waste materials and marked as such, eg waste oil. These should be emptied at regular intervals.

- Any unnecessary materials or liquids shall not be permitted to accumulate in work areas.

- Unnecessary tools and equipment should be removed from all work sites and returned to the stores.

- Solvents, paints, flammable liquids, chemicals and explosives are stored in locked containers or stores used solely for the purpose. The containers or Stores will be located outside of workshop, port-cabin and working areas.

- Fire or emergency equipment should never be obstructed by stacking objects around or in front of them.

This document is the property of SPCC who will safeguard its rights according to the civil and penal provisions of the Law.

- Hoses, wires, ropes and electric cables should never be left over walkways,Where people could trip over them. Electric/welding cables should be kept out away from water. Fire doors should never be obstructed by cables or wedged open by any means.

- Dust will be controlled on a daily basis by frequent sweeping or wetting of the work area.

- Scrap and debris will be removed from all work areas, storage areas and camps as a minimum at the end of each shift. Scrap or used timber with protruding nails shall be removed immediately, and either de-nailed for further use or taken from the site.

- Burning of waste materials shall not be allowed on the work site.

- All combustible debris shall be removed and disposed of at a properly licensed location.

- Equipment that may drip oil or grease shall be fitted with a fire proof sheet or have a suitable drip pan placed under it.

- A colour code shall be adopted for making easier for the disposal of waste segregation system to personnel working at site.(eg : Blue – metal,green – wooden ,Red – oil waste,black –mixed waste)

5.1 WASTE MATERIAL SEGRAGATION

Construction debris, domestic garbage oily wastes and hazardous wastes should not be mixed upon collection.

As a minimum waste material segregation shall be arranged with following colour code in the on shore construction site or colour can be changed according to required country legislation.

- Iron, steel, scraps metal –(Blue)
- Hazardous wastes (paints, exhausted oils drums, etc.)- (Red)
- Wood –(Green)
- Mixed waste – (Black)

Concerning hazardous material this shall be stored on dedicate areas equipped with collecting traps for oils (such as for exhausted oils drums) concrete pavement and a perimeter curb.

This document is the property of SPCC who will safeguard its rights according to the civil and penal provisions of the Law.

5.2 INSTRUCTIONS

These instructions shall apply equally to office, workshop, site or desert locations used by consortium personnel or their contractors during the course of the project.

All emergency exits passageways, exits, fire doors, break-glass alarm points, fire fighting equipment, first aid stations, and other emergency stations shall be kept clean, unobstructed and in good working order.

All workplaces, accesses and means of escape shall be maintained clear of debris waste and other rubbish, which shall be disposed of in segregated containers for disposal.

The minimum walkway width shall be 120 cm.

All spillages of liquids, especially of oily or greasy liquids, shall be immediately cleared by absorption in inert sand or other suitable materials.

Toxic, corrosive or other hazardous liquids shall be cleared up in accordance with manufacturer's instructions or safety data sheet.

All material used to mop up spills shall be immediately removed to a safe place and stored in closed containers for safe disposal.

Tools, equipment and raw materials at the workplace should be kept to a minimum commensurate with efficient working practice.

Finished work, tools and equipment should be removed as soon as possible to their defined storage area such that the workplace is maintained clear.

Common-sense and good working practice shall be employed when storing or placing materials, boxes, pallets or containers such that they do not pose a threat to workers from lifting, tripping or blocking egress routes.

Offices shall be regularly cleaned.

Laboratories and workshops shall be maintained clear of debris, waste and other rubbish, which shall be disposed of in accordance with manufacturers guidelines and the Contractor `Waste Management' guide.

Adequate time will be assigned to ensure that good housekeeping is maintained.

This may be carried out by the workers in a particular office, workshop or site or, at the discretion of consortium management, by a team of specialist cleaners.

Any instances of poor housekeeping that results in the creation of a tripping, slipping or fire hazard shall be immediately dealt with.

Materials shall be stacked or stored in a safe manner that prevents sliding, falling or collapse.

This document is the property of SPCC who will safeguard its rights according to the civil and penal provisions of the Law.

When carrying out shuttering operations or any other activity that results in splinters, nails or other sharp edges the activity will be controlled by removal or other methods as appropriate.

Arrangements shall be in place to ensure that cable management is controlled and that walkways/stairways are kept clear of temporary electrics and hoses.

Waste disposal containers shall be sited for food waste, and such areas as utilised for eating shall be kept clean and tidy.

Where materials are being removed from elevated structures proper arrangements shall be in place (e.g. barriers, signs, winches, hoists etc.) to eliminate the risk of injury to personnel working in the area.

This document is the property of SPCC who will safeguard its rights according to the civil and penal provisions of the Law.

PTTLNG Nong Fab LNG Receiving Terminal Project

SHE PROCEDURES (HYDRO TESTING)

Doc. Class Z

This document is the property of SPCC who will safeguard its rights according to the civil and penal provisions of the Law.

Revision list:

Rev. Nr	Modifications:
R1	First Issue

TABLE OF CONTENTS

1 PURPOSE 177

2 REFERENCE DOCUMENTS 177

3 RESPONSIBILITIES 177

4 INTRODUCTION 177

5 PREPARATION OF LINES AND EXECUTION OF TESTS 177

6 DESCRIPTION OF SAFETY INSTRUCTION 179

6.1 General Instruction 179

6.2 Notification 180

6.3 Documentation 180

6.4 Safety Instruction 180

6.5 Personal protective equipment 181

This document is the property of SPCC who will safeguard its rights according to the civil and penal provisions of the Law.

1 PURPOSE

The purpose of this procedure is to define the safety precautions to be established to ensure that hydrotesting is undertaken in a manner that both personnel carrying out the works and personnel working in surrounded area will not be exposed to hazards which may derive from this specific activity.

2 REFERENCE DOCUMENTS

- STD-COR-HSE-016
- STD-COR-HSE-005

3 RESPONSIBILITIES

Construction Manager is responsible for ensuring the project safety requirements and specific safety issues related to the activity considered.

Construction Mechanical supervisor has the duty to ensure the compliance with the established schedule, project and safety requirements.

4 INTRODUCTION

Hydrostatic testing is universally known and accepted as a means of demonstrating the fitness of a pressurized component for service. After a test, a pipeline or pressure vessel can be expected to safely contain its intended operating pressure. The confidence level that a pipeline or pressure vessel is fit for safe service increases as the ratio of test pressure to operating pressure increases. This highly beneficial aspect of hydrostatic testing applies not only to a new component to be placed in service for the first time. A similar benefit accrues to an in-service component if that component is taken out of service after a period of time and subjected to a hydrostatic test. A “revalidation” test of the latter type assures either that no significant timedependent deterioration of the component has taken place or that any segment that has been significantly degraded will be revealed and eliminated.

5 PREPARATION OF LINES AND EXECUTION OF TESTS

The preparatory work carried out by Subcontractor consists of, but is not limited to the following:

- Prior to writing and issuing test procedures, historical documentation for the equipment to be tested shall be reviewed; i.e. Design Data Sheets, Inspection reports and Safety Instruction Sheets.
- Written, approved procedures shall be provided to all concerned personnel at least two days before testing, and be available at the job sites for pressure tests with a high potential hazard such as those on cross country pipelines of all kinds, plant piping, pressure vessels, and power boilers.

  The following information shall be included in each test procedure as a minimum:

  (a) A pressure test diagram or hydrostatic test diagram.

  (b) A test manifold arrangement.

This document is the property of SPCC who will safeguard its rights according to the civil and penal provisions of the Law.

(c) The location of blind flanges and isolation valves, if any.

(d) The location of check valves (flappers should be removed, if necessary, prior to testing).

(e) The location of the lowest rated component that determines the test pressure.

(f) The location of air vents, if appropriate.

(g) Relief valve size and set pressure.

(h) The test medium.

(i) The test pressures.

(j) Special support requirements, if any, to take the weight of test liquid.

(k) Chemical additives, if any.

(l) The test sequence.

(m) The minimum temperature allowed, if appropriate.

(n) Inspection requirements.

(o) Areas to be kept free of people during the test and the location of barricades, if appropriate.

(p) The location of warning signs and markings for the test areas, if appropriate.

(q) Work permits required, if any.

(r) The test medium disposal method.

(s) Additional or special personal safety equipment required.

(t) Safety Instruction Sheets and emergency communication required, and the methods.

(u) Vacuum valve size and set pressure, if any.

- all lines involved in the test must be cleaned of all dirt and/or objects left inside. If considered necessary, washing with water and/or air blowing are allowed.
- removal of all valves and in-line equipment that must be excluded from the test and, if necessary, the prefabrication and installation of mock-ups.
- temporary locking of expansion joints to avoid lateral movements.
- installation/fixing of supports and anchorages. In certain cases, temporary or additional supports may be necessary due to the weight of the filled lines.
- isolation of the ball valves located at battery limits, on piping side. If these valves are mounted along the line being tested, they must be set to the “fully open” configuration.
- removal, if necessary, of control valve spectacle blinds (Contractor Piping Department must assess the availability of spare parts).
- temporary locking of spring supports for supporting the weight of the lines being tested (spring supports provided with lock pins for the test do not need locking).
- removal of orifice plates.
- installation of all temporary blind flanges (including temporary gaskets) and/or plugs in all the battery limits.
- installation, at the highest point and the lowest point, of two calibrated pressure gauges with a maximum scale equal to twice the test pressure.
- tightening of bolts on all flanged and/or threaded connections.

This document is the property of SPCC who will safeguard its rights according to the civil and penal provisions of the Law.

- connection at the lowest point of the filler pump to the network to be tested via a high-pressure hose.
- filling of the lines with test fluid.

The following precautions must be taken when filling the lines:

- when the test conditions require the pressure to be maintained for a period of time in which the test fluid could be subjected to thermal expansions, a bleed valve should be mounted.
- vents and other connections must be open to eliminate air from the lines. The test pressure cannot be applied before the lines have been adequately purged of all residual air.
- lines on which control valves are mounted must have the pressure source applied to the pipe upstream of the control valve so that pressure is applied beneath the seat. If this is not possible, the spectacle blind of control valves must be removed.
- valve seats must not be subjected to pressures in excess of the valve's maximum operating pressure or as specified by the supplier.

When Contractor and Company representatives are present at the place of testing, Subcontractor can start to increase the pressure, following the rules described below:

- pressure inside the lines must be gradually increased to 95% of the test pressure using a motor pump and afterwards using a manual pump up to the precise pressure value planned for the test.
- when the specified test pressure is reached, close the test fluid inlet connection via the shut off valve and disconnect the filling pump.
- the planned test pressure must be maintained until all joints (welded and/or flanged) have been inspected (leak check) and, in any case, for not less than ten (10) minutes.
- check the test pressure on the calibrated pressure gauges both before and after inspection of the joints.
- check tightness of valves.

The requirements above described are not applicable to pneumatic tests and high-pressure hydraulic tests, for which it is necessary to prepare a dedicated procedure for the project that includes all of the special safety requirements and ASME B31.1 or ASME B31.3 rules (as applicable).

6 DESCRIPTION OF SAFETY INSTRUCTION

6.1 GENERAL INSTRUCTION

The following general instructions shall be followed and adhered to.

- Dedicated work permit must be obtained following specific procedure.
- An emergency procedure has to be issued considering unwanted events coming from hydrotest activity.

This document is the property of SPCC who will safeguard its rights according to the civil and penal provisions of the Law.

- All personnel working at site must be informed in advance when hydrotest is going to be carried out.

6.2 NOTIFICATION

Before starting any operation, the Construction personnel responsible of hydrotest has to give notification to all people present at site. Therefore a communication has to be sent to, Vendors, Sub-contractors and Company which work at site. Due to the risks of the activity, the responsible of the hydrotest shall give a notification at least 24 hours prior to starting the operation. The notification can be sent early due to the high complexity of the activity or area in which the activity has to be done.

The communication has to contain, at least, the following information:

- Area involved in the activity. It is better to annex a plot plan with highlighting the area.
- The extension of the area to be fenced off.
- Time and data of starting the activity.

6.3 DOCUMENTATION

Before starting the hydrotest activity Construction personnel have to prepare dedicated P&ID in which the pipes and vessel to be pressure tested have to be highlighted. This P&ID must be attached to the Work Permit together with the JSA.

Construction supervisor will verify, before start activity, that the circuit has being prepared complying with all prescriptions written in the JSA and Work permit .

Construction personnel have also to prepare a map showing:

- The location of the hydrotest.
- The required barricaded area.
- Date and time of starting the activity.
- Pumps,Manifold, tubes, gauges, safety valves must be certify and calibarated for the ratio of the test.

6.4 SAFETY INSTRUCTION

Construction responsible of the hydrotest has to guarantee, through sub-contractors, that at site the following actions are put in place.

- Fence off at safe distance from the tested circuit.
- Post signs around the barricaded area showing:
- “DANGER: NO ENTRY TO UNAUTHORIZED PERSONNEL”
- “HYDROTEST IN OPERATION”
- “USE PROPER PERSONAL PROTECTIVE EQUIPMENT”
- Isolate any electrical connections and ensure that can not be energized.

Construction response for the hydrotest has to carry out the following activities:

- Inspect the system verifying that all mitigation measures are put in place:

This document is the property of SPCC who will safeguard its rights according to the civil and penal provisions of the Law.

1. Removal of all valves and in-line equipment that must be excluded from the test and, if necessary, the prefabrication and installation of mock-ups.
2. Temporary locking of expansion joints to avoid lateral movements.
3. Installation/fixing of supports and anchorages. In certain cases, temporary or additional supports may be necessary due to the weight of the filled lines.
4. Isolation of the ball valves located at battery limits, on piping side. If these valves are mounted along the line being tested, they must be set to the "fully open" configuration.
5. Removal, if necessary, of control valve spectacle blinds (Contractor Piping Department must assess the availability of spare parts).
6. Temporary locking of spring supports for supporting the weight of the lines being tested (spring supports provided with lock pins for the test do not need locking).
7. Removal of orifice plates.
8. Installation of all temporary blind flanges (including temporary gaskets) and/or plugs in all the battery limits.
9. Installation, at the highest point and the lowest point, of two calibrated pressure gauges with a maximum scale equal to twice the test pressure.
10. Tightening of bolts on all flanged and/or threaded connections.

- Suspend all activities inside the barricaded area when the activity is being executed.
- Verify, prior to filling columns/drums/vessels or overhead piping systems with water, if those items and their foundations/supports to withstand full water weight.
- Verify that all people involved in the activity wear appropriate Personal Protective Equipments (PPE).
- Carry out a tool box meeting before start the activity.
- Activate the emergency procedure in case an unwanted situation happens.
- Make sure that the water to be discharged has the quality parameters complied with standard fixed by client.

An HSE Officer has to assist the Construction team to prevent non authorized personnel or vehicles from entering the barricaded area.

6.5 PERSONAL PROTECTIVE EQUIPMENT

In addition to PPE required to the normal activity inside the plant it is mandatory use the following personal protections:

- The persons directly involved at the discharge point shall use proper goggles and gloves.
- If the hydrotest is used the operator must use an overall rubber protection, face shield, gloves and rubber boots.

This document is the property of SPCC who will safeguard its rights according to the civil and penal provisions of the Law.

PTTLNG Nong Fab LNG Receiving Terminal Project

SHE PROCEDURES
(LEADING INDICATOR SYSTEM)

Doc. Class Z

This document is the property of SPCC who will safeguard its rights according to the civil and penal provisions of the Law.

Revision list:

Rev. Nr	Modifications:
R1	First Issue

TABLE OF CONTENTS

1 PURPOSE 192

2 REFERENCE 192

3 RESPONSIBILTIES 192

4 INTRODUCTION 193

5 TRAILING INDICATORS AND LEADING INDICATORS 194

5.1 Trailing Indicators 194

5.2 Leading Indicators 195

1.1.1 Process Overview to use Leading Indicators 196

6 ATTACHEMENTS 205

6.1 Attachment no. 1 – Leading indicators score cards 205

6.2 Attachment no. 2 – Safety activities guide lines 212

This document is the property of SPCC who will safeguard its rights according to the civil and penal provisions of the Law.

1 PURPOSE

A requirement of good Leading Indicator system is to measure progress and assessing health, safety and environment. A Leading indicator system involves determining what data to collect; how, when and who will collect the data; analysis of the data; and reporting current progress." Leading indicators are forward looking and when well crafted, can help the project manager know where to apply attention to a project.

2 REFERENCE

- **STD-COR-ORGA-009**

3 RESPONSIBILTIES

Contractor Site Manager

The Site Manager is responsible for all site activities. Appointed personnel will manage most of the aspect of site activities, including the Leading Indicators system and performance.

The Site Manager will delegate the duty of the correct application of the Contractor proforma to Construction Manager and FSHEM.

Contractor Construction Manager

The Construction Manager will be responsible for ensuring the effective administration of this procedure within Construction site activities and shall ensure that this procedure is properly implemented at site.

- The Construction Manager shall ensure routine evaluation of the site on weekly basis to enhance the standard of working culture and for continual improvement.
- Shall nominate Contractor Engineers/Supervisors, Sub Contractors Engineers along with the Contractor S H E department personnel to carry out the weekly inspection activity.
- Inspect all the requirements for the specific activity and indicate any deviation from the method statement and provide observation, Non Conformity and mitigation measures for the observed task and assess where the project is lagging.
- verify that the subcontractor is providing the correct information and equipment for the scope of work;
- Nominate personnel and authorise them to perform the inspection and analyse the deviation periodically by leading indicators .

Contractor FSHEM on site

This document is the property of SPCC who will safeguard its rights according to the civil and penal provisions of the Law.

- ensure that all necessary support, advice and guidance is made available to enable this procedure to be properly implemented;
- ensure adequate training to all personnel involved in this procedure to prepare the leading indicators chart;
- ensure that suitable and sufficient inspections and audits are carried out to assess the deviation;
- evaluate the effectiveness of this procedure and change amend as is required or becomes necessary to achieve its purpose;
- advise the Contractor Management of any irregularities or areas of concern in order to investigate and to implement corrective actions;
- Check whether all the deviations are closed out by appropriate personnel and ensure all corrective measures are implemented in site.

4 INTRODUCTION

Safety is a core value at Contractor. We believe:

a. no business objective is more important than the safety of our people;
b. all injuries and illnesses are preventable.

Contractor establishes prioritized objectives for its capital projects, normally including safety, cost, schedule, and quality.

The safety slogan of the Contractor for this Leading indicators safety campaign is **“Nobody Gets Hurt”**, which implies no incidents and a Total Recordable Incident Rate (TRIR) of zero.

In order to achieve this, projects need to **“not have incidents”**.

Managing incidents to minimize lost time, restricted duty, etc., and focusing on the TRIR to-date on a project does little to promote “not having incidents” or serve the cause of incident prevention.

Recent studies have shown that time spent proactively improving those activities that prevent incidents, instead of reactively managing the results of incidents, lead to fewer injuries and safer worksites.

Contractor applying best industries safety practices introduces a new tool, Leading Indicators, to be used in the pursuit of safety excellence.

"Leading Indicators" is the name given to those activities (also known as safe system behaviors) that prevent incidents, e.g., toolbox talks, safety inspections, etc.

This document is the property of SPCC who will safeguard its rights according to the civil and penal provisions of the Law.

By choosing the most effective incident prevention activities (Leading Indicators), measuring, reporting, stewarding and analyzing them, the activities can be improved and made more effective, which in turn prevents incidents and drives the safety program toward excellence.

Following figure shows the difference between Leading Indicators and the more traditional and familiar Trailing Indicators.

LEADING and TRAILING INDICATORS

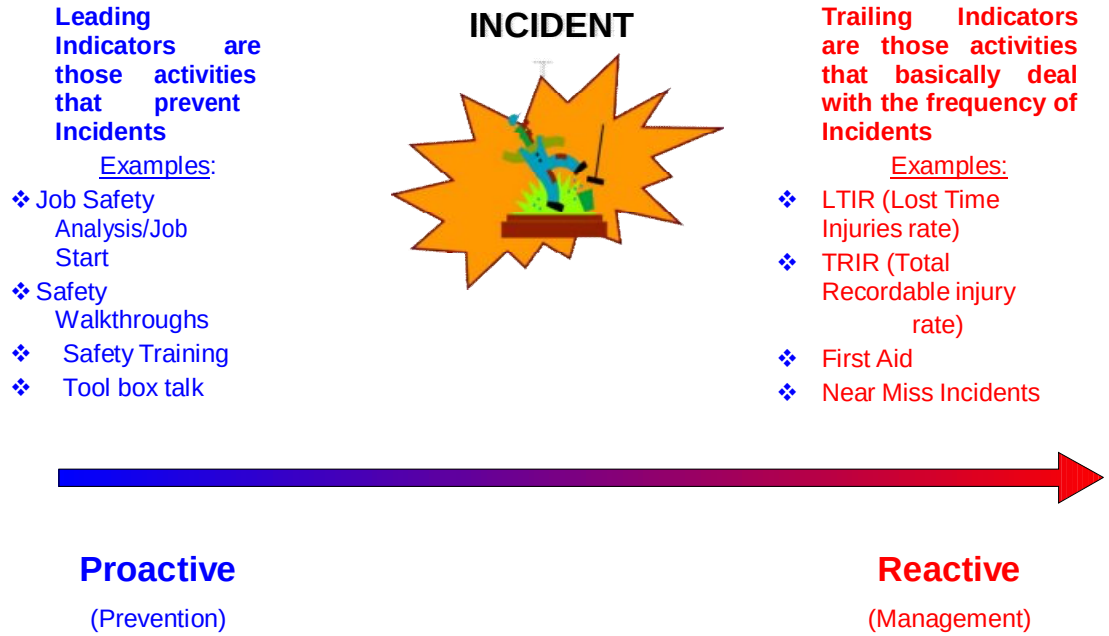

Contractor need to work with their Subcontractors to implement the process described herein.

5 TRAILING INDICATORS AND LEADING INDICATORS

5.1 TRAILING INDICATORS

OSHA record keeping requirements are responsible for the most common Trailing Indicators, such as number of Lost Time Incident rate (LTIR), Total Recordable Incident Rate (TRIR), Lost workdays, etc.

Trailing Indicators may not consistently be an accurate measure of performance over a long period of time because of several variables:

Employee's decision to report:

This document is the property of SPCC who will safeguard its rights according to the civil and penal provisions of the Law.

- Supervisor's influence;
- Doctor's decision;
- Local cultures;
- Safety organization's interpretation of reporting standard;
- Management's influence;

These variables and others present on a given worksite give a low level of confidence in metrics reported.

What's Wrong With Trailing Indicators?

- They are linked to bad news;
- Low level of confidence due to confusing definitions;
- Low level of confidence due to variability in how incident is managed;
- Reflect reactive process;
- Many people may try to influence reporting.

Although sometimes misleading and/or inaccurate, Trailing Indicators are not going to go away since the project safety records that lead to these statistics are required by law.

Trailing indicators, despite their flaws, provide the useful function of being the ultimate scorecard reflecting success of the Leading Indicator process.

The more successful Leading Indicators are, the lower the incident rates.

Projects will continue to report Trailing Indicators, but best practice is to improve a set of Leading Indicators for a project to drive the safety program toward excellence by emphasizing prevention.

Main Trailing indicators:

(1) Number of Lost time Injuries (LTI);

(2) Restricted Work cases;

(3) Medical treatment cases;

(4) First Aid cases;

(5) Near miss incidents.

5.2 LEADING INDICATORS

Leading Indicators are safe system (as opposed to individual) behaviors used by projects to prevent incidents.

This document is the property of SPCC who will safeguard its rights according to the civil and penal provisions of the Law.

By focusing on the incident prevention process (use of Leading Indicators) rather than the incident management process (use of Trailing Indicators), resources are applied proactively (rather than reactively), and the safety program is managed instead of incidents.

Measuring, reporting, and analyzing Leading Indicators leads to fewer incidents and better safety performance.

The more incidents that are prevented, the fewer the incidents there are to manage, and the more time there is to focus on Leading Indicators.

This in turn leads to fewer incidents.

It's an "upward spiral" where everyone wins.

Use of Leading Indicators also provides senior and line management the opportunity to get involved in safety proactively, before incidents occur.

Leading indicators to be used on project are following:

(1) Safety Training;

(2) Tool Box Talk;

(3) Safety Walk - Inspections;

(4) Safety walkthrough at management level;

(5) Safety Meeting;

(6) JSA/Job Start.

5.3 PROCESS OVERVIEW TO USE LEADING INDICATORS

The nine steps shown in following flow diagram describe the process for utilizing Leading Indicators.

This document is the property of SPCC who will safeguard its rights according to the civil and penal provisions of the Law.

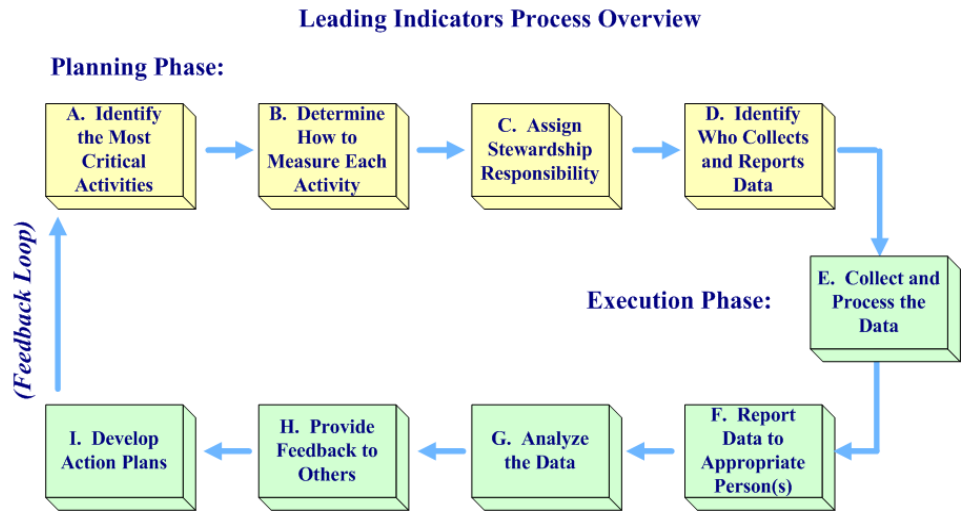

A.Identify The Most Critical Activities/Processes

- Subcontractors Safety Training;
- Subcontractors Tool Box talk;
- Safety Walks (Inspection);
- Safety walkthrough at management level;
- Subcontractors Safety Meeting;
- JSA/Job Start.

These seven core Leading Indicators will be monitored, measured, and reported.

B. Determine How To Measure Each Activity Chosen

Tables on the attachment no. 1 “Leading indicators score cards” will be used by Contractor Field S H E Manager and Safety Supervisor to give a percent performance value about leading indicators.

“Leading indicators score cards” to be applied are on enclosed.

The percent performance is the division between the Total score and the Maximum Potential Score.

To perform correctly following safety activities please respect check list attached on attachment no. 2 “Safety activities guide lines”.

This document is the property of SPCC who will safeguard its rights according to the civil and penal provisions of the Law.

C.Assign Stewardship Responsibility

The responsibility for stewarding the Leading Indicator activity is of the Contractor Field SHE Manager with the collaboration of Safety Supervisor for this reason first of all Contractor Field SHE Manager will prepare the detailed programs respecting the following preliminary programs given as a base indication to be improved.

Safety training program

Each Subcontractor shall prepare a training program and delivery this to the Contractor Field SHE Manager each Monday morning.

Subcontractor must prove the competence and qualifications of all the trainers.

Contractor Field SHE Manager or Safety Supervisor must follow on spot base the trainings and apply the dedicated score card to check the quality of the training.

This check must be done not less than one time in a week.

If training isn't satisfactory Subcontractor trainer shall be instructed and a training guide-line followed respecting e.g. NEBOSH criteria.

Tool box talk program

Contractor Field S H E Manager and Subcontractors Safety Managers will select every week and will publish on the site safety board:

Dates, time, meetings points, forecast composition of group of workers;

- Topic of tool box, selected regarding matters of wrong behaviors or wrong application of procedures or near miss happened on site or foreseen job activities etc.
- Name of Subcontractors and names of the foreman charged for the tool box and forecast number of participants;
- Every Subcontractor will perform a minimum of one tool box work for day – personnel and areas of tool box will be considered "at rotation";
- Contractor Field SHE Manager will program schedule of tool box in the way to have time to assist personally to the tool box and to prepare evaluation on "tool box safety meeting scorecard";
- A selected number of Contractor Discipline supervisors shall be appointed and their participation shall be considered compulsory;
- A minimum of 20 tool box monthly for each Subcontractor will be performed.

Safety Walk Inspection Program

This document is the property of SPCC who will safeguard its rights according to the civil and penal provisions of the Law.

Every week will be prepared by Contractor Field S H E Manager a program regarding participants, meeting point time – The program will be published every Friday on Contractor Safety board.

Safety inspection is always performed in all working areas, including field facilities and offices.

The team of observation will be composed as follow:

- Contractor Field SHE Manager or Contractor Safety Supervisor;
- Contractor Supervisors (at rotation);
- Subcontractors Foremen/Construction Managers (at rotation);
- Subcontractors Safety Manager
- Subcontractor workers (at rotation);

Contractor Field S H E Manager will prepare every week the “Safety Inspection Report” using the proper form.

The form will be sent to all Subcontractors in order to have proper implementation.

The day after during the inspection the team will verify closed action planned the day before.

The form filled every week and the form containing closing actions will be published on Contractor Safety Board.

A minimum of four officials Safety Inspection will be performed monthly.

Safety walkthrough at management level program

Every month will be prepared by Contractor Field S H E Manager a program regarding participants, meeting point, time. The program will be communicated directly by FSHEM to the participants via e-mail.

The monthly management safety walkthrough can be conduct together with a weekly Safety walk inspection and is always performed in all working areas, including field facilities and offices.

The team of observation will be composed as follow:

- Contractor Project Manager
- Contractor Site Manager;
- Contractor Field SHE Manager;
- Subcontractors Construction Managers ;
- Subcontractors SHE Managers;

Contractor Field S H E Manager will prepare the “Safety walkthrough Report” using the proper form.

This document is the property of SPCC who will safeguard its rights according to the civil and penal provisions of the Law.

The form will be sent to all Subcontractors in order to have proper implementation.

The day after during the inspection the team will verify closed action planned the day before.

The form filled containing closing actions will be published on Contractor Safety Board.

Safety meeting program

Each Subcontractor shall prepare a safety meeting program and deliver it to the Contractor Field SHE Manager each Monday morning with the list of the subjects to be discussed, that have also to be related to the last Contractor Safety Meeting.

Subcontractors must prove the competence and qualifications of the Safety Managers involved.

Contractor Field HSE Manager or Safety Supervisor must follow on spot base a Subcontractors Safety meeting and apply the dedicated score card to check the quality of the meeting.

This check must be done not less than one time in a week.

A minimum of 4 safety meetings for each Subcontractor shall be performed on monthly base.

This document is the property of SPCC who will safeguard its rights according to the civil and penal provisions of the Law.

JSA (Job Safety Analysis) Program/Job Start

Every permit of work regarding not routine activity/specially critical will be covered by JSA.

JSA will be lead on the Job Start (just before work commence) by the foreman with full participation of the craft workers.

The JSA will be revised during the Job Start at any changing/modification of work, new workers assigned, weather and reviewed at the end of the tasks as lesson learning.

Major JSA can be used for implementation of tool box meeting.

- Consider all JSA requirements (a brief version of the JSA shall be hand in to the foreman) and inform craft workers about the risks and safety measures;
- If JSA isn't required, because routine work, during the Job Start a verbal risk assessment must be however done by foreman/Subcontractor Supervisor with the collaboration if possible of the Contractor Discipline Supervisor. Inform craft workers about the risks and safety measures application are compulsory;
- All scaffolding and equipment related to the work shall be checked before work commence;
- All environmental condition shall be checked before work commence;
- All PPE shall be checked before work commence.

D.Identify Who Collects And Reports Data

Data will be collected by Contractor Field SHE Manager and Safety Supervisor.

All safety activities shall be recorded on the correct forms and handed in to the Contractor Field SHE Manager:

After the tool box the Foreman will prepare Tool Box report, a copy of the report shall give to Contractor Field SHE Manager.

Copy of tool box report and tool box meeting scorecard will be published on safety board inside Contractor offices and all provided Subcontractors safety boards on site.

JSA/Job start score card shall be reported by Subcontractor Foreman to Contractor Field SHE Manager.

Safety inspection shall be reported directly to Contractor Field SHE Manager and hand out to Site Manager, and all Subcontractors.

This document is the property of SPCC who will safeguard its rights according to the civil and penal provisions of the Law.

Subcontractors minute of Safety meetings shall be handed in to the Contractor Field SHE Manager by Subcontractor safety managers.

Subcontractors minute of Training with the summary of subject explained and list of personnel trained shall be handed in to the Contractor Field SHE Manager by Subcontractor safety managers.

Score cards shall be prepared directly by Contractor Field SHE Manager and discussed with Subcontractors Safety Mangers during Contractor Safety Meetings.

E.Collect and Process the Data

Collected data will be processed by Contractor Field SHE Manager for all leading activities on the specific scorecards.

F.Report Data

Data will be reported to Contractor Field SHE Manager on weekly basis for all of the 5 leading indicators chosen.

G.Analyze The Data

Contractor Field SHE Manager must resist the temptation to focus too closely on the numbers.

Instead, focus on what the numbers are saying, and use them as a starting point to assess the safety program in general and the incident prevention process in particular.

Avoid using the numbers as a contest among subcontractors or various groups on the project.

Competition can lead to manipulation of the numbers that will quickly destroy the objective of the process.

Plotting the data graphically is an excellent analytical tool to readily identify trends. Trend analysis is a very important step since:

- Corrective action may be required if the trend is negative.
- Positive trends may be correlated with decreasing incidents trend which provide great reinforcement for the process.

H.Provide Feedback to Others

Trends identified by data analysis need to be communicated to others on the project.

This document is the property of SPCC who will safeguard its rights according to the civil and penal provisions of the Law.

Positive trends need to be acknowledged, and those responsible should be recognized.

Negative trends need to be addressed in a positive, constructive fashion. Additional work (e.g., measurements, analysis, etc.) may be required to gain the necessary insight to mitigate the disappointing results.

The feedback process is an excellent mechanism to reinforce expectations to all personnel on the project.

One technique for communicating expectations and feedback is via “fireside chats”:

This is a series of meetings between the Contractor Site Manager/Contractor Field SHE Manager and specific Subcontractor management/supervisory personnel that

re-emphasize commitments, elaborate on expectations, and reiterate accountability in the way to plan improvement actions for Training, Tool Box, Safety Meeting, JSA/Job Start and Safety Inspections results.

These meetings will be arranged as part of Construction Progress Meetings and Safety Meeting that normally shall be conducted during project execution phase.

It is a good idea to continue this alignment process throughout the project.

I. Develop Action Plans

Insight into disappointing trends gained analyzing the data by Contractor Field SHE Manager this provides the basis for Action Plans to improve performance.

An Action Plan may be brief, but it should be written by Contractor Field SHE Manager and approved and auctioned by Contractor Site Manager that has the authority who can “make things happen”.

Action Plans should have a target date for resolution of the issue, and the status of these plans should be reviewed periodically until completed.

Better is spread the ownership of Action Plans around without overload anyone.

L. Feedback Loop

Data analysis and Action Plans results may indicate changes are needed in the choice of Leading Indicators.

Especially on large projects that take a long time to execute, systems mature and evolve. New Leading Indicators may be a part of this evolution.

Activities that no longer add value should be modified or replaced with more appropriate ones.

This document is the property of SPCC who will safeguard its rights according to the civil and penal provisions of the Law.

Contractor Field SHE Manager and Contractor Site Manager should answers to questions like, “Which activities or processes add the most value?” and “What is really working?” will provide the focus and help ensure the right things are being measured.

If the wrong things have been chosen, change them.

Contractor Field SHE Manager finds out what leading indicators works, and goes with it. Worker surveys can provide useful information in this regard.

This document is the property of SPCC who will safeguard its rights according to the civil and penal provisions of the Law.

6 ATTACHEMENTS

6.1 ATTACHMENT NO. 1 – LEADING INDICATORS SCORE CARDS

SAFETY TRAINING SCORE CARD

DATE _____ LOCATION _____ OBSERVERS _____	Score (circle those that apply)	Maximum Potential Score
Management Leadership		
Trainer appeared well prepared for Safety Training, Training held with a minimal amount of distractions,	**2**	
Trainer was enthusiastic and capable of presenting topic,	**2**	
Trainer communicated care for the workers	**2**	
Trainer opened lines of communication	**2**	**8**
Worker Involvement I		
50 to 75% of crew attended training	**1**	
75% to 90% of crew attended training	**3**	
90 + % of crew attended training	**6**	**6**
Worker Involvement II		
Some group participation was evident	**2**	
Moderate group participation was evident	**4**	
Strong group participation was evident	**8**	**8**
Incident Prevention Focus		
Topic was relevant for expected activities	**2**	
Alignment was provided on company's expectations	**2**	
Worker's knowledge was increased or reinforced	**2**	
Safe behavior was demonstrated	**2**	**8**
Total Score		**30**

Percent Performance	

This document is the property of SPCC who will safeguard its rights according to the civil and penal provisions of the Law.

TOOLBOX TALK SCORE CARD

DATE _____ LOCATION _____ OBSERVERS _____	**Score (circle those that apply)**	**Maximum Potential Score**
Management Leadership		
Supervisor appeared well prepared for Toolbox Talk, meeting held with a minimal amount of distractions	**2**	
Supervisor was enthusiastic and capable of presenting topic	**2**	
Supervisor communicated care for the workers	**2**	
Supervisor opened lines of communication	**2**	**8**
Worker Involvement I		
50 to 75% of crew attended Toolbox Talk	**1**	
75% to 90% of crew attended Toolbox Talk	**3**	
90 + % of crew attended Toolbox Safety Meeting	**6**	**6**
Worker Involvement II		
Some group participation was evident	**2**	
Moderate group participation was evident	**4**	
Strong group participation was evident	**8**	**8**
Incident Prevention Focus		
Topic was relevant for expected activities	**2**	
Alignment was provided on company's expectations	**2**	
Worker's knowledge was increased or reinforced	**2**	
Safe behavior was demonstrated	**2**	**8**
Total Score		**30**

Percent Performance

This document is the property of SPCC who will safeguard its rights according to the civil and penal provisions of the Law.

SAFETY MEETING SCORE CARD

DATE _____ LOCATION _____ OBSERVERS _____	**Score (circle those that apply)**	**Maximum Potential Score**
Management Leadership		
Supervisor appeared well prepared for Safety Meeting, meeting held with a minimal amount of distractions	**2**	
Supervisor was enthusiastic and capable of presenting topic	**2**	
Supervisor communicated care for the workers	**2**	
Supervisor opened lines of communication	**2**	**8**
Worker Involvement I		
50 to 75% of crew attended meeting	**1**	
75% to 90% of crew attended meeting	**3**	
90 + % of crew attended meeting	**6**	**6**
Worker Involvement II		
Some group participation was evident	**2**	
Moderate group participation was evident	**4**	
Strong group participation was evident	**8**	**8**
Incident Prevention Focus		
Topic was relevant for expected activities	**2**	
Alignment was provided on company's expectations	**2**	
Worker's knowledge was increased or reinforced	**2**	
Safe behavior was demonstrated	**2**	**8**
Total Score		**30**

Percent Performance

This document is the property of SPCC who will safeguard its rights according to the civil and penal provisions of the Law.

SAFETY WALK (Inspections) SCORE CARD

DATE _____ LOCATION _____ OBSERVERS _____	Score (circle those that apply)	Maximum Potential
Participation		
- 60% of team present at time of starting	**2**	
- 80% of team present at time of starting	**4**	
- 100% of team present at time of starting	**6**	**6**
Areas		
- Working areas covered by inspection	**4**	
- Working areas and field facilities covered by inspection	**6**	
- Working areas and field facilities covered by follow up of previous inspection	**10**	**10**
Reporting		
Report prepared and published on day after the inspection – no follow up from previous inspection	**2**	
Report prepared and published on safety board the same day of inspection	**5**	
Report prepared and published on safety board the same day of inspection with follow of previous inspection	**10**	**10**
Quality of Inspection		
*Some people of the group not very interested	**2**	
People of the group moderate interested	**5**	
All people of the group very interested and proactive	**10**	**10**
Follow up		
Some non conformity inspection – Inspection not closed in the some day	**2**	
Non conformity closed in the some day. No implementation in meeting or tool box	**5**	
Non conformity closed in the same day and implemented in meetings and/or tool box	**10**	**10**
Total Score		**46**

Percent Performance

*: write here name of personnel not interested, not proactive and not collaborative:

This document is the property of SPCC who will safeguard its rights according to the civil and penal provisions of the Law.

MANAGEMENT SAFETY WALKTROUGH SCORE CARD

DATE _____ LOCATION _____ OBSERVERS _____	**Score (circle those that apply)**	**Maximum Potential**
Participation		
- 60% of invited management team present at time of starting	**2**	
- 80% of invited management team present at time of starting	**4**	
-100% of invited management team present at time of starting	**6**	**6**
Areas		
- Working areas covered by inspection	**4**	
- Working areas and field facilities covered by inspection	**6**	
- Working areas and field facilities covered by follow up of previous inspection	**10**	**10**
Reporting		
Report prepared and published more than three days after the inspection– no follow up from previous inspection	**2**	
Report prepared and published on safety board maximum in three day after the inspection	**5**	
Report prepared and published on safety board maximum in three day after the inspection with follow of previous inspection	**10**	**10**
Quality of Inspection		
Some managers in the group not very interested	**2**	
Managers in the group moderate interested	**5**	
All managers of the group very interested and proactive	**10**	**10**
Follow up		
Some non conformity evidenced in the inspection not closed in three days after the inspection	**2**	
Some non conformity closed in three days after the inspection. No implementation in meeting or tool box	**5**	
Non conformity closed in three days after the inspection and implemented in meetings and/or tool box	**10**	**10**
Total Score		**46**

Percent Performance

This document is the property of SPCC who will safeguard its rights according to the civil and penal provisions of the Law.

JSA/Job Start PROCESS SCORE CARD

DATE _____ LOCATION _____ OBSERVERS _____	**Score (circle those that apply)**	**Maximum**
Initiation		
JSA/Job Start initiated by supervisor	**2**	
JSA/Job Start initiated by craft worker	**4**	
Requested Sonatrach mentor to observe and facilitate JSA Process	**4**	**8**
Preparation		
JSA utilized was a copy of previous JSA	**2**	
JSA was prepared from scratch day of task	**5**	
JSA was prepared from scratch immediately prior to task	**8**	**8**
Review		
JSA reviewed at start of shift	**2**	
JSA reviewed at start of task as Job Start	**8**	**8**
Participation		
Supervisor Lead		
JSA was lead as Job Start by supervisor with minimal participation by craft workers	**2**	
JSA was lead as Job Start by supervisor with moderate participation by craft workers	**4**	
JSA was lead as Job Start by supervisor with full participation by craft workers	**6**	
Employee Lead		
JSA was lead as Job Start by a craft worker with moderate participation of the craft workers	**8**	
JSA was lead as Job Start by a craft worker with full participation of the craft workers	**10**	**10**
Change of Scope		
JSA revised on the Job Start during task to reflect changing conditions	**8**	**8**
Review		
JSA reviewed at end of task for learning's	**8**	**8**
Total Score		**50**

Percent Performance

This document is the property of SPCC who will safeguard its rights according to the civil and penal provisions of the Law.

6.2 ATTACHMENT NO. 2 – SAFETY ACTIVITIES GUIDE LINES

Guidelines to define / set Responsibilities of Subcontractors Safety Training

Simple rules always to be followed:

- Introduction:

  SHE Training for the EPC Construction Works shall include as a minimum:
  - Project SHE Orientation and Induction;
  - Subcontractor(s) SHE Training for specialized activities such as scaffolding, electrical system, health surveillance, etc., It may be necessary to bring in dedicated training personnel;
  - Permit to Work training;
  - For Marine activities are mandatory also the ISPS (International Ship Port Security) code awareness.

- Subcontractor Trainer minimum requirements:

  - Trainer has to be certified and competent. Certification and CV shall be evaluated by the Contractor FHSEM
  - Trainer shall be able to speak language of appointed workers;
  - Trainers must be an able communicator clear and simple to understand by all participants also on technical subjects;
  - Subcontractor(s) SHE Manager is authorized to train directly or by third certified part the Incident Response Team (ICT) and give evidence of the training to the FSHEM and SM.

- Training Materials minimum requirements:

  - Training material shall be evaluated by Contractor FSHEM and integrated with some materials produced by Contractor Safety team;
  - The first part of the training shall concern the injuries and if possible is required to show pictures of injured people;
  - Slide showed shall be clear and with many drawings to be understood by everyone also illiterate people;
  - Certificates should be issued to persons successfully completing specific training courses and adequate records maintained by the Contractor SHE staff.

- Participants minimum requirements:

  - Personnel shall be motivated and interested;
  - Personnel shall be tested at the end of the training;

This document is the property of SPCC who will safeguard its rights according to the civil and penal provisions of the Law.

- Personnel shall participate proactively on the training asking clarification if needed;
- If personnel is illiterate, during the induction they must declare this condition and if need to be trained, a visual training is mandatory for them.

Guidelines to define / set Responsibilities of Subcontractors Toolbox talk (TBT)

Simple rules always to be followed:

- Introduction:
  - The Contractor Field SHE Manager shall ensure that a full range of TBT's covering all foreseeable topics, are made available;
  - Information about, and lesson learnt from, accidents should also be used as TBT's;
  - Contractor Site Manager (SM) shall ensure that all employees receive one TBT per week as a minimum, preferably relating to their work, work area or lessons learnt;
  - A consistent number of Tool Box Talk topics have been prepared by Contractor Field SHE Manager and will be available for site personnel;
  - TBT topics may also be taken from accident investigations, revised procedures and general lesson learnt.
- Subcontractor Tool box talker minimum requirements:
  - Tool box talker shall be the foreman/ Subcontractor Supervisor;
  - Foreman or the Subcontractor Supervisor shall have received a specific training to do that;
  - Good communication capacity and proper language use understood by workers are required.
- How to conduct a toolbox talk (minimum requirements):
  - The subject to be explained during the toolbox talk shall have been shared and approved by the Contractor FSHEM;
  - If a serious near miss or accident happened tool box talk shall be considered an opportunity to explain all the workers the lesson learnt. What happen, why happened, future action to prevent the recurrence;
  - Always during the toolbox talk is necessary to give an opportunity to the workers to clarify some doubts and for this reason workers shall be motivated to ask question;

This document is the property of SPCC who will safeguard its rights according to the civil and penal provisions of the Law.

- Contractor Supervisors on spot base have to assist to the toolbox talk giving their unconditioned opinion and suggesting additional safety measures to the workers;
- Proper records of the TBT must be maintained by the Subcontractor and Contractor SHE Team.

- Participants minimum requirements:
  - Personnel shall be motivated and interested;
  - Personnel shall participate proactively on the toolbox talk asking clarification if needed;
  - Personnel feel responsible for safety and must understand that if something is going wrong they have to correct methodology or ask help to the foreman/subcontractor supervisor to improve all safety measure applied.

Guidelines to define / set Responsibilities of Safety Walk Team Members

The team of observation will be composed as follow:

- Contractor Construction Manager;
- Contractor Field SHE Manager or Contractor Safety Supervisor;
- Contractor Supervisors (at rotation);
- Subcontractors Foremen/Construction Managers (at rotation);
- Subcontractor Safety Managers
- Subcontractor workers (at rotation);

- Purpose

Purpose of these guidelines is to define the correct method of inspection by safety walk team members in a way that results of inspections are made more productive to improve safety on site.

- Scope

These guidelines will cover responsibilities of safety walk team members involved in all scheduled safety walk through by implementing the correct techniques and method of inspections to highlight unsafe acts and unsafe conditions.

- Objective of Safety Walk

Everyone understands that safety walk is one way of identifying the problems and rectifying them on priority basis.

To make safety walk more productive, it is essential that all members should understand the techniques and methods of inspection during safety walk.

This document is the property of SPCC who will safeguard its rights according to the civil and penal provisions of the Law.

Basic purpose of any safety inspection is safety improvement without blame.

To achieve maximum results from safety walk through, all team members should actively participate to identify hazards, unsafe acts, unsafe conditions so that identified problems could be eliminated.

The intention should always be to improve safety and that will be achieved if all team members take this opportunity in a positive manner.

Safety Walk is a routine audit performed by experienced and qualified personnel on regular basis, audits are performed to identify and rectify existing problems and to avoid problems that might follow by taking proactive steps.

It is a continuous process of improvement.

Safety is Everyone's Responsibility!

- Responsibilities of Safety Walk Team Members:
  - Identify unsafe acts and conditions that might lead to incidents and accidents;
  - Check and confirm that correct procedures are implemented for safe completion of activities;
  - Fix the systems that are not functioning as designed and defined using proactive approach;
  - Ensure that correct method of work is applied (work method statement and safety measures as JSA requirement);
  - Confirm compliance of safety management system and safety arrangements to facilitate the activities;
  - Differentiate between situations that need immediate actions and conditions that can be taken care of at a later stage by assigning the responsibility to concerned persons;
  - Highlight areas that are more likely to have incidents or accidents so that greater attention can be focused on such areas;
  - Priorities the issues considering the possible outcome of the problems identified;
  - Identify the safe acts and conditions and compare with unsafe acts and conditions to highlight areas of improvement ;
  - Appreciate good performance and explain the reason of appreciation;
  - Rectify problems using proactive approach;
  - Check people, check equipment, check material: everything should be in right condition and positions and used in the right place;
  - Do not just check that work area is not clean, check why it is not clean and how to solve housekeeping problem;
  - Check all areas of work place;

This document is the property of SPCC who will safeguard its rights according to the civil and penal provisions of the Law.

- Always follow up on problems identified and rectified during previous safety walk.

- Follow-up:

A dedicated meeting at the end of the safety walk could be the best solution to discuss about the problems noticed and find immediately possible solutions to avoid any recurrence. By the way all opened action must be closed in a reasonable time that mean time agreed with all the participants.

Guidelines to define / set Responsibilities of Management safety walkthrough Team Members

The team of observation will be composed as follow:

- Contractor Project Manager;
- Contractor Site Manager
- Contractor Field SHE Manager or Contractor Safety Supervisor;
- Subcontractors Construction Managers;
- Subcontractors SHE Managers

- Purpose

Purpose of these guidelines is to define for the management the correct method for checking the site in a way that the safety walkthrough could be really a method to improve safety on site.

- Scope

These guidelines will cover responsibilities of safety walk team members involved in all scheduled safety walk through by implementing the correct techniques and method of inspections to highlight unsafe acts and unsafe conditions.

- Objective of Safety Walk

Everyone understands that safety walk is one way of identifying the problems and rectifying them on priority basis.

To make safety walk more productive, it is essential that all members should understand the techniques and methods of inspection during safety walk. Could be useful to apply a dedicated check list transmitted one week before to the managers participants.

To achieve maximum results from safety walk through, all team members should actively participate to identify hazards, unsafe acts, unsafe conditions so that identified problems could be eliminated.

This document is the property of SPCC who will safeguard its rights according to the civil and penal provisions of the Law.

The intention should always be to improve safety and that will be achieved if all team members take this opportunity in a positive manner.

- Responsibilities of Safety Walkthrough Team Members:
    - Identify unsafe acts and conditions that might lead to incidents and accidents;
    - Check and confirm that correct procedures are implemented for safe completion of activities;
    - Fix the systems that are not functioning as designed and defined using proactive approach;
    - Ensure that correct method of work is applied (work method statement and safety measures as JSA requirement);
    - Confirm compliance of safety management system and safety arrangements to facilitate the activities;
    - Differentiate between situations that need immediate actions and conditions that can be taken care of at a later stage by assigning the responsibility to concerned persons;
    - Highlight areas that are more likely to have incidents or accidents so that greater attention can be focused on such areas;
    - Priorities the issues considering the possible outcome of the problems identified;
    - Identify the safe acts and conditions and compare with unsafe acts and conditions to highlight areas of improvement ;
    - Appreciate good performance and explain the reason of appreciation;
    - Rectify problems using proactive approach;
    - Check people, check equipment, check material: everything should be in right condition and positions and used in the right place;
    - Do not just check that work area is not clean, check why it is not clean and how to solve housekeeping problem;
    - Check all areas of work place;
    - Always follow up on problems identified and rectified during previous safety walk.
- Follow-up:

A dedicated meeting at the end of the safety walk could be the best solution to discuss about the problems noticed and find immediately possible solutions to avoid any recurrence. By the way all opened action must be closed in a reasonable time that mean time agreed with all the participants.
Everybody in quality of manager responsible must admit own responsibility and act proactively to close the non-conformity noticed as soon as possible.

This document is the property of SPCC who will safeguard its rights according to the civil and penal provisions of the Law.

Guidelines to define / set Responsibilities of Subcontractors Safety Meetings

Simple rules always to be followed:

- Personnel appointed to take part on Contractor Safety meeting

Contractor FSHEM (as leader) and Subcontractors Managers.

An involvement of Discipline Supervisors should be a good start point to give effectiveness to all safety process implementation.

- Personnel appointed to take part on Subcontractors Safety meeting

Subcontractor Manager (as leader) and Subcontractor Safety Officers.

An involvement of Subcontractors Discipline Supervisors should be a good start point to give effectiveness to all safety process implementation.

- Requirement for safety meetings Leaders

  - Leader shall be well communicative and give correct solutions and implementation to resolve problems;
  - Leader shall have the capacity to listen all participants and answer to all questions;
  - Leader knows real problems on site also because of safety supervisor collaboration.

- How to conduct a Safety Meeting (minimum requirements)

  - Storming of information, ordering and solutions shall be the correct flow to be used to find problems, to see what somebody didn't see, to apply safety measures and address to all project construction management team;
  - Lesson learnt of near miss/accidents shall be always explained comprehensive of safety measures to be applied to avoid recurrence;
  - Safety meeting shall addressee all safety problems (especially concerning overlapping work operation) and suggest technical safety solutions if required.

- Participants minimum requirements

  - Personnel shall be motivated and interested;
  - Personnel shall participate proactively on the safety meeting asking clarification if needed;
  - Personnel feel responsible for safety and must understand that if something is going wrong they have to think about solutions to prevent the recurrence and ask for the correct management help to increase power of the corrective actions.

This document is the property of SPCC who will safeguard its rights according to the civil and penal provisions of the Law.

Guidelines to define / set Responsibilities of Subcontractors JSA/Job Start

Simple rules always to be followed:

- Subcontractor Job Start responsible minimum requirements
  - Job Start Responsible shall be the foreman/ Subcontractor Supervisor;
  - Foreman or the Subcontractor Supervisor shall have received a specific training to do that;
  - Good communication capacity and proper language use understood by workers are required.
- How to conduct a Job Start (minimum requirements)
  - Before commence the work in the morning foreman/ Subcontractor Supervisor must check all safety conditions of the area, weather conditions, workers conditions etc and fit the Job start to real and actual condition;
  - If JSA have been issued an extract well summarized shall be delivered to the foreman/Subcontractor Supervisor. A briefing shall be reported to all workforce involved during Job Start;
  - If JSA isn't required, in case of routine work, during the Job Start a verbal risk assessment must be carried out by foreman/Subcontractor Supervisor and if possible with the collaboration of the Contractor Discipline Supervisor. Inform craft workers about the risks and safety measures to be applied as mandatory.
- Participants minimum requirements
  - Personnel shall be motivated and interested;
  - Personnel shall participate proactively on the Job Start asking clarification if needed;
  - Personnel feel responsible for safety and must understand that if something is going wrong they have to correct methodology or ask help to the foreman/subcontractor supervisor to improve all safety measure to be applied.

This document is the property of SPCC who will safeguard its rights according to the civil and penal provisions of the Law.

PTTLNG Nong Fab LNG Receiving Terminal Project

SHE PROCEDURES
(LIGHTING FOR CONSTRUCTION WORKS)

Doc. Class Z

This document is the property of SPCC who will safeguard its rights according to the civil and penal provisions of the Law.

Revision list:

Rev. Nr	Modifications:
R1	First Issue

TABLE OF CONTENTS

1 PURPOSE 223

2 REFERENCE 223

3 RESPONSIBILITIES 223

4 INTRODUCTION 223

5 INSTRUCTIONS 224

5.1 Natural lighting 224

5.2 Task lighting 224

5.3 Access and stair lighting 225

5.4 Emergency lighting 225

5.5 Night working lighting 226

This document is the property of SPCC who will safeguard its rights according to the civil and penal provisions of the Law.

1 PURPOSE

The general philosophy of the project is to eliminate risks related with inadequate lighting and give an address for plan a good lighting system fo all site.

2 REFERENCE

- STD-COR-HSE-0016

3 RESPONSIBILITIES

The Contractor Field HSE Manager will be responsible for the following:

- ensuring that Supervision and subcontractor management are familiar with this procedure;
- that any work carried out during the night are covered by this procedure;
- monitoring site conditions and measuring the lighting provided to ensure it falls within the requirements of this procedure.

The Contractor Supervisors and Superintendents will be responsible for:

- ensure that lighting provided is adequate (average 300 Lux and as minimum point is 150 Lux) and that personnel are not working in shadow;
- check the placement of all emergency light inside the offices, canteen, clinic, ware house, workshop;
- when occasions occur that require working into the hours of darkness the responsible Contractor Supervisor will ensure that the Client Site Representative has been informed and that he is satisfied that all necessary precautions are in place;
- for night work activities such as radiography they will ensure that signs, barriers and flashing lights are provided as well as adequate lighting;
- provision of instruction particularly with regard to the movement of vehicles (concrete trucks) within the areas of work;
- ensuring that adequate barriers are provided around areas where hazards may exist, and that such hazards are clearly lit.

4 INTRODUCTION

To inform relevant persons of the hazards associated with inadequate lighting for construction work and their role as obligation holders on this issue.

Poor lighting levels and/or the lack of emergency lighting and illuminated signage in times of power failure or in emergency situations can lead to serious workplace incidents which may affect workers and others on construction sites.

This document is the property of SPCC who will safeguard its rights according to the civil and penal provisions of the Law.

The following workplace issues may be considered not acceptable :

- inadequate task lighting (e.g. confined spaces)
- inadequate access and stair lighting
- inadequate emergency lighting.
- Inadequate night working lighting

The objective and purpose of a lighting system should be considered at the design and installation phases. This is especially significant for workplaces where construction work is performed as the lighting system must be able to accommodate changes in work activities and the progression of construction.

The lighting system should ensure the safety of people to the extent that the lighting makes hazards visible. The facilitation of visible tasks and the creation of an appropriately illuminated environment must also be considered.

The lighting system should, therefore, be designed and installed, so as to reveal the task and provide a safe and comfortable visual environment.

Definitions

- Lumen is the unit used to describe the amount of light emitted by a source or received on a surface.
- Lux is equivalent to one lumen per square metre.

5 INSTRUCTIONS

5.1 NATURAL LIGHTING

Where natural light is present the workplace should be assessed to ensure sufficient lighting for:

- safe access to and from the workplace
- safe performance of tasks
- exiting the workplace in emergency situations (specific attention should be given to the identification, illumination and signage of emergency exits)
- the size and complexity of the workplace, taking into account all of the above.

5.2 TASK LIGHTING

Task lighting enables workers to see clearly so they are more likely to carry out work tasks in a safe way, especially work inside confined spaces and building.

This document is the property of SPCC who will safeguard its rights according to the civil and penal provisions of the Law.

Contractor will monitor the use of task lighting on site when required and will check safe housekeeping practices which includes establishing and maintaining an orderly workplace environment to prevent or minimise a person's exposure to risk that may result because of hazards at the workplace.
Lack of lighting is an hazard that can become really dangerous in case of poor housekeeping.

For lighting it is required average 300 Lux and as minimum point is 150 Lux for general work areas, this level should be considered as a minimum value when designing a lighting system also for offices , workshop, ware house, canteen, clinic etc.
Inside the offices is better to have lighting value average 300 Lux and as minimum point is 150 Lux.

5.3 ACCESS AND STAIR LIGHTING

Access and stair lighting is necessary especially during the night so workers can see clearly to move around the workplace in a safe manner.

Lighting is also required at the access of a confined space and inside a confined spaces at a reasonable value of average 300 Lux and as minimum point is 150 Lux.

5.4 EMERGENCY LIGHTING

Emergency lighting is important to assist workers to exit the workplace in an emergency situation.

The emergency procedures for a workplace *as offices*, workshop, warehouse, canteen, clinic requires for Contractor and each Subcontractor to plan for emergency situations which includes emergency and evacuation lighting and signage.

Emergency equipment, evacuation lighting and signage, requires battery- powered lighting to be sufficient for workers to safely exit the site if there is a loss of power and insufficient natural lighting.

Emergency evacuation signage may be integrated in an existing emergency lighting system providing that system of lighting incorporates battery back up light fittings capable of illuminating the exit signage and providing clear direction on the safe means of egress from the workplace in the event of power failure.

Emergency escape luminaries should be located within 2 metres of the approach side of each doorway requiring an exit sign and located to emphasis potential hazards to people exiting the workplace.

This document is the property of SPCC who will safeguard its rights according to the civil and penal provisions of the Law.

5.5 NIGHT WORKING LIGHTING

All points of exit, pathways and muster points shall be clearly illuminated at least not less than 150 lux.

Ladder accesses and egress shall be clearly illuminated.

Lighting equipment provided shall be 110 volts, and checked in accordance with the procedure for temporary electrics.

Where bayonet type light bulbs are used as stringers for illuminating passageways and stairways, they shall be protected by cages.

Lights provided for this purpose shall be sited to avoid glare and spaced to provide adequate light for the areas covered.

The illumination shall be measured prior to the work being carried out by a light meter, calibrated in Lux.

Tower lighting shall be sited in a manner that illuminates all parts of the area where the work is taking place.

Lighting provided in confined spaces shall be in accordance with specifications.

Generators provided shall be checked prior to use to ensure they meet the requirements of the Plant and Equipment procedure.

Cables employed for the purpose of temporary lighting shall be routed to ensure that they do not present a trip hazard or other obstruction.

Lighting poles and other metal parts shall be earthed and the circuit fitted with residual current devices.

This document is the property of SPCC who will safeguard its rights according to the civil and penal provisions of the Law.

PTTLNG Nong Fab LNG Receiving Terminal Project

SHE PROCEDURES (MANUAL HANDLING)

Doc. Class Z

This document is the property of SPCC who will safeguard its rights according to the civil and penal provisions of the Law.

Revision list:

Rev. Nr	Modifications:
A	First Issue

TABLE OF CONTENTS

1 PURPOSE 229

2 REFERENCE 229

3 RESPONSIBILITIES 229

4 INTRODUCTION 230

5 SAFETY PRECAUTIONS FOR MANUAL HANDLING MANAGEMENT ON SITE 230

5.1 CRITICAL ASPECTS 230

5.2 MINIMUM SAFETY PRECAUTION TO BE RESPECTED 231

5.3 THE MANUAL HANDLING TOTAL MANAGEMENT 234

5.4 IDENTIFICATION OF HAZARD 235

5.5 ASSESSMENT OF RISK 235

5.6 RISK CONTROL 236

5.7 CONTROLLING THE RISK 240

5.8 CONSULTATION 240

This document is the property of SPCC who will safeguard its rights according to the civil and penal provisions of the Law.

1 PURPOSE

Procedure shall provide guidance for the management of risks associated with manual handling tasks. The scope is to monitor workers involved in the manual handling critical works activities to provide all necessary training and technical solutions especially to reduce or avoid the risk consequent to the heavy material transport for personnel.

2 REFERENCE

- STD-COR-HSE-016
- STD-COR-HSE-005

3 RESPONSIBILITIES

Project Manager

- Shall be responsible for the implementation of this procedure both in construction site and camp.
- Appoint competent people to help advise and apply the measures needed.
- Arrange sufficient health & safety training so that they can avoid risks at their jobs, i.e., risk reduction.
- Efforts to mechanize or automate the process.

Construction Manager / Site Superintendent

- Shall ensure that all personnel handling materials on the site adhere to the requirements of this procedure.
- Assess the risks of the health & safety of the employees
- Supply employees with information about health & safety matters
- Place duties of employees to follow health & safety instructions and report danger.

SHE Supervisor

- It is the responsibility of SHE Supervisor to provide specialist information and guidance related to the topics and contents of Tool Box Talks.
- He will monitor smooth conduction of toolbox talks by each crew through Supervisor / Foreman on the construction spread and maintains records.

Supervisor /Foreman

- Shall monitor the correct implementation of the safety precautions enclosed within the procedure.
- Set up emergency procedures (first aid, recovery etc)

This document is the property of SPCC who will safeguard its rights according to the civil and penal provisions of the Law.

- Provide the employees with health & safety information to meet special needs.

All Employees/ Workers

- Will take reasonable care for their health and safety and of others who may be affected by their acts or omissions, and co-operate with the Construction Management in complying with this procedure and any statutory requirements.

4 INTRODUCTION

Poor manual handling practice is one of the most common hazards confronted by people in all workplaces. No industry or workplace is free from manual handling hazards. However, the
degree of risk differs significantly from one workplace to another and from one activity to another. Manual handling seldom kills or disfigures anyone, but the injuries that occur, although invisible, are often disabling, long term and costly.

Manual handling is any activity involving the use of muscular force (or effort) to lift, move, push, pull, carry, hold or restrain any object, including a person or animal. It covers more than
lifting heavy weights and affects more than the back. Manual handling also includes the repetitive activity seen in assembly work; the sustained muscle exertion required to
restrain or support a load; and the effort needed to maintain the fixed postures that occur in the back and neck while typing. Injuries often occur due to wear and tear, accumulated from
frequent periods of manual handling activity that stress the body, such as repetitive work or heavy lifting. The effects of these injuries often become more disabling as workers become older.

5 SAFETY PRECAUTIONS FOR MANUAL HANDLING MANAGEMENT ON SITE

5.1 CRITICAL ASPECTS

Manual handling is a critical activity because involve many different work tasks. Often the consequences of a wrong manual handling are a back pain but sometime a wrong action on manual handling done in some critical conditions such as working at height or during lifting activity can have as result a serious injury.
Erroneous manual handling during working carried out on height can have as result the fallen from height of the handled tools or object, but sometime if worker is moving some difficult materials for size or weight such as grating, and if worker is moving on height without proper protections and tie-off a more tragic event can happen with the fallen from height of the worker.
Lifting operation can involve people as assistant to be on duty for balancing lifted equipment or pipe, or during loading or unloading of materials from trucks. A suddenly lose of balance of a stack collapse of material can really have serious injury consequences.

This document is the property of SPCC who will safeguard its rights according to the civil and penal provisions of the Law.

Very serious accident happen also for heavy vehicle maintenance when worker to find out the broken mechanism put the hand in some narrow locations forgetting to switch-off the motor or to inform operator.
So manual handling often is a consequence of a wrong work method statement that has not considered correctly the risks in the related job safety analysis and has missing to consider how to carry out practically some work activities that finally cannot be carried out without manual handling works.

5.2 MINIMUM SAFETY PRECAUTION TO BE RESPECTED

Typical accidents that may occur from handling materials include:

- Crush injuries from falling loads, collapsing stacks, etc.
- Mechanical damage to storage containers, leaking and spillage of chemicals with the risk of toxic contamination or fire.
- Cuts, falls, back injuries, pulled muscles, etc. from poor lifting methods or careless storage.

As minimum following precautions shall be respected:

- The use of proper lifting methods is suggested by many experts in the field of safety and occupation medicine. The lifting methods and suggestions are general in nature and may not apply exactly to all lifting tasks since variables such as weight, size and shape of objects or loads as well as the physical build and strength of the person doing the lifting must be considered. Never underestimate manual lifting activities especially if in critical conditions such as working at height and a very well done work method statement and job safety analysis is required.
- Mechanical material handling equipment or aids should always be used when possible to lessen the amount of manual lifting required for a job. The amount of weight in a single lift should be limited to approximately 50 pounds when working with sacked or bagged chemicals or materials.
- Personnel shall be aware of the proper methods of lifting and moving heavy or awkward loads, either manually or with mechanical assistance.
- Suitable protective clothing to avoid pinching or cutting of hands, injury to head or feet, inhalation of dust, etc. shall be worn, as necessary. Where handling of materials is done in conjunction with cranes and lifting gear, reference shall be made to procedure ‘Lifting Operation’ in the HSE Construction Manual.

Drums

Drums contain various liquids and powders and are often of a size, which makes them awkward to handle.

This document is the property of SPCC who will safeguard its rights according to the civil and penal provisions of the Law.

The following precautions shall be observed:

- Drums shall never be handled manually up or down stairways, elevated areas or into excavations.
- Mechanical handling aids (e.g. drum trolleys) shall be used, where appropriate.
- In open storage areas, drums shall be stored lying down to prevent water collecting in the top rim, but these must be secured against movement (e.g. chocks or racks).
- When located in areas other than in a designated storage area, drums shall be left in a position so as not to cause an obstruction.
- Where drums are located for dispensing their contents, drip trays shall be provided to prevent liquids causing a slipping hazard to personnel walking past, or a fire hazard from inflammable liquids.

All empty drums shall be removed from working areas. Drums, which have contained flammable or toxic substances, shall not be used for other purposes.

Sheet Metal

Falling of metal sheets and plates can cause particularly severe crushing or guillotine injuries. The following precautions shall be taken:-

- Personnel handling sheet metal shall always wear suitable protective gloves (e.g. chrome leather with armoured palms).
- Where possible, metal sheets shall be handled mechanically.
- Vertical stacking of small sheets can save valuable floor space and prevent obstructions, but precautions shall be taken to prevent them slipping or falling over (e.g. floor battens, webbing restrainers, etc.).
- Where sheets are stored horizontally, larger sheets shall be placed at the bottom and spacing blocks should be placed between the sheets to ensure easier handling, battens shall be used where necessary.

Pallets

Incorrect use of pallets can lead to unsafe lifting operations or to collapse of material stacks. Precautions to be observed are:-

- Pallets shall only be used for the purpose they were intended, bearing in mind their construction, and correctly loaded.
- Pallets shall not be used if damaged.
- Pallets shall be kept in designated areas, with precautions taken to prevent collapse or tilting.

This document is the property of SPCC who will safeguard its rights according to the civil and penal provisions of the Law.

- Pallet stacks shall not exceed 4 pallet loads.

Waste Materials

Collection, temporary storage and disposal of waste materials from JV facilities shall be carefully controlled. Waste shall be:-

- Collected in a way, which separates hazardous waste from non-hazardous waste.
- Clearly identified and labelled as to any risks.
- Stored temporarily, prior to collection/disposal, in a suitable place.
- Disposed of in a controlled and proper manner using a competent contractor, where appropriate.

Hazardous waste shall include lubricants, chemical residues, oily or contaminated rags, and toxic substances. Removal of certain hazardous substances may require special documentation (in case of doubt check with the Health & Safety Department).

Material storage

- Storage shall be arranged to minimise the amount of handling.
- Storage shall be kept tidy and shall not obstruct roadways, walkways, work areas and escape routes from hazardous areas, fire protection equipment or other emergency devices and equipment.
- Material and casings are particularly heavy items, and even when moving slowly present a risk of serious crushing accidents because of the high amount of weight inertia involved. Handling and storage of such heavy items must be conducted in accordance with 'Lifting Operations' in the HSE Construction Manual.
- Material shall be stacked in horizontal layers, supported, if necessary, with suitable packing materials between them. The following precautions apply to material storage:-
- During pipes storage, pipe shall slope towards the back of a storage area so that they cannot roll off the support rack.
- Pipes shall never protrude into roadways, walkways and escape routes, or be stacked so they can fall through guardrails in the event of displacement.
- Pipe storage areas shall never be overloaded

This document is the property of SPCC who will safeguard its rights according to the civil and penal provisions of the Law.

5.3 THE MANUAL HANDLING TOTAL MANAGEMENT

In the next sections we are going to consider the manual handling management in all steps necessary to have a real prevention and control of all accident and professional illnesses manual handling work related.

The effort required to Contractor and Subcontractors is first of all to identify (also considering accident and near miss recorded) all manual handling risks and assess the identified risks associated to the manual handling hazards.

Consequently shall be developed the control measures and training shall be provided to the staff ensuring that adequate records are made and kept of these processes for monitoring and auditing.

The process followed to manage the manual handling risk shall adhere to follow scheme:

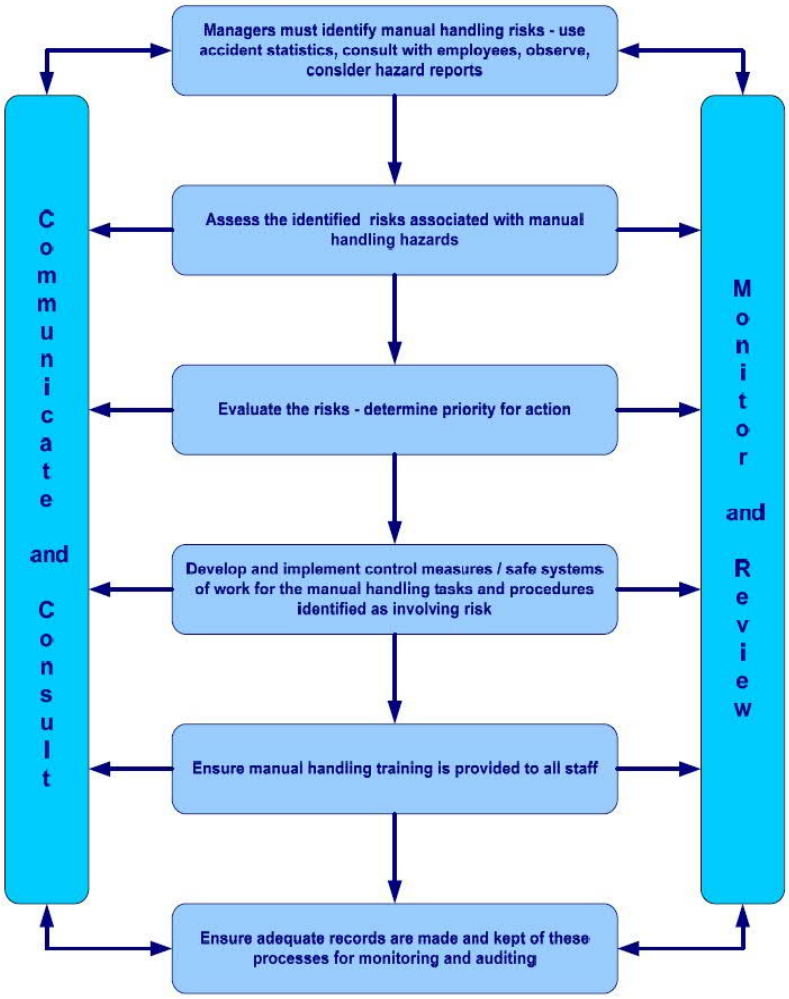

This document is the property of SPCC who will safeguard its rights according to the civil and penal provisions of the Law.

5.4 IDENTIFICATION OF HAZARD

Identify manual handling tasks likely to present risks to health and safety through:

- consultation
- direct observation
- analysis of workplace injury and incident records
- employee reports

5.5 ASSESSMENT OF RISK

Assess risk by considering the likelihood and consequences of an injurious event. This assessment needs to include a judgement about an injury occurring as a result of a particular activity, and in reference to manual handling, should include consideration of the following ergonomic and other factors:

- actions and movements
- workplace and workstation layout
- working posture and position
- duration and frequency of manual handling
- location of loads and distances moved
- weights and forces
- characteristics of loads and equipment
- characteristics of people as loads
- work organization
- work environment
- skills, training and experience
- personal characteristics and special needs of employees
- clothing worn
- other relevant factors

Activities likely to require risk assessments include; purchasing, moving heavy or large items, lifting children or other persons and storage of equipment.

This document is the property of SPCC who will safeguard its rights according to the civil and penal provisions of the Law.

TO ACHIEVE AN ADEQUATE ASSESSMENT:

Identify the tasks that involve manual handling which are likely to stress the body. All tasks include elements of manual activity. Identify the significant manual tasks. If in doubt, include the
task and assess it later.
To decide which tasks are likely to stress the body:

- observe the tasks to see what activity is actually involved
- review incident, injury and first aid reports to identify the tasks that have caused injuries and difficulties in the past
- talk to people doing the job to find out their experience of the job – is it difficult or tiring?
- find out how many people actually do the various jobs and for how long
- consider all of the risk factors for body stressing in your assessment.

5.6 RISK CONTROL

Control hazards in accordance with the hierarchy of controls. Control measures may include one, or a combination of the following:

- eliminate the task
- job re design e.g. modify workplace layout, rearrange work flow, modify actions, movement and forces
- modify the task e.g. break the load into smaller packages, team lifting
- mechanise the process or provide mechanical assistance
- ensure training is provided – including induction training
- administrative controls, e.g. signage, rotation of tasks.
- personal protective equipment, e.g. protective clothing

A combination of control measures may be required for effective control of manual handling hazards and must be evaluated and monitored for effectiveness. These controls may form part of a Safe Work Practice.

HOW DO WE IDENTIFY TASKS WITH MANUAL HANDLING RISK?

There are several ways to identify the tasks likely to cause body stress when carrying out manual work.

This document is the property of SPCC who will safeguard its rights according to the civil and penal provisions of the Law.

1. Look at injury, incident or first aid reports to see if any of these involve muscle sprains, strains or spasms; bruises; back pain; or joint aches and pains. Your injury, incident and first aid reporting records should include a record of the activity being done at the time of the incident. From this, you can identify the tasks with possible manual handling risks.

2. Observe the work tasks being done to see if the worker needs to:

• bend (particularly if the hands pass below mid thigh height)
• stretch
• over-reach (particularly where there are objects blocking the way)
• work or reach above shoulder height
• carry out the task for long periods of time
• handle heavy objects
• work rapidly doing a repetitive activity, such as typing, wrapping, sorting or packing
• work in an area that is slippery, uneven or has restricted space.

3. Talk to the workers about their experience of doing the job:

• Is anything about the job difficult, tiring, or uncomfortable?
• Has the worker had training?
• Is special clothing needed while doing the job?

Assessment of Risk

Assessing the risk means - consider the exposure of workers to the tasks and the possible effects of that exposure. The hazardous activities you have identified on your list, have been included because they expose the body to stress that could result in an injury. These activities are stressful mainly because of the postures and movements required by the task, the force that must be used and the environment in which the task is performed. As you look at the tasks consider how likely it is that a sprain, strain or joint injury will occur. The risk increases as the number of risk factors involved increases. Also consider how much time a person spends doing this task (the duration) and how often it is done (the frequency), as this will significantly affect the overall stress on the body.
As you work through assessing the risk factors you may find it useful to give each factor a risk rating of low, medium or high as a way of helping to decide the priority for action.
The assessment must take the following list of factors into account.

This document is the property of SPCC who will safeguard its rights according to the civil and penal provisions of the Law.

Actions and movements required

Actions and movements should be done smoothly and without pain or discomfort. Twisting, bending and overstretching stress the joints, ligaments, muscles and tendons.
The risk is increased if these actions are jerky or uncoordinated. If these stressful actions are done frequently there is a great risk of damage to joints and soft tissues.

layout and design of the workstation or workplace

The design of the workplace largely determines the way in which workers have to do the task. The placement of controls, tools and items that have to be viewed influence the posture used while doing the work. Cartons placed on the floor mean that workers have to bend to pick them up. A work bench or computer workstation that is too high causes the worker to raise their shoulders while working. A conveyor line that does not allow easy access to each side makes workers reach to remove parts. These activities increase the risk of injury, particularly if the job is done for long periods or performed repeatedly.

The Postures and positions used by each person to do the task

Work activities should allow the worker to use different postures, vary the tasks and have the opportunity to take brief rest breaks. Extreme postures, like bending forward or sideways, twisting or over stretching increase fatigue and the risk of damage to muscles and joints. The actual weight of the body itself can create a significant load in certain positions e.g. when stretching an arm to reach an object. The weight of the arm and the object both have to be supported by muscular effort. These postures and movements generally make the job more difficult and tiring.

The location of loads and the distance they have to be moved

The distances that loads have to be moved should be as short as possible. The longer the distance, the lighter the load that can be safely carried. If the load is located above the shoulders or below the knees, this forces the worker to use extreme postures. The effort that can be exerted by muscles is much less when the joint is in an extreme position. This makes the work more difficult and increases risk of injury.

Weights and Forces involved weight , although an important facor , is only one of the risk factors that have to be considered Handling tasks from a seated position does not allow the operator to use the stronger leg muscles. Therefore, the risk of injury is increased, particularly if loads are greater than 4kilograms. The risk of back injury significantly increases if handling loads greater than 16 – 20 kilograms. Certainly no person should be expected to lift, lower or carry loads above 55 kilograms without mechanical assistance, or team handling, to reduce the risk. This type of load is common where the manual handling of people is necessary e.g. in nursing or ambulance work. Apart from lifting, lowering or carrying, many tasks in the workplace require force to move, hold or restrain objects. When pushing, pulling or sliding objects, the amount of force required is determined by the weight, the nature of the load and the surface it has to be moved across. Muscle stress and rapid fatigue occurs when the same muscles are held in sustained tension, without movement, during a task e.g. in the neck and shoulders while holding a load, during typing tasks or when painting above shoulder height. When this type of work is carried out without the

This document is the property of SPCC who will safeguard its rights according to the civil and penal provisions of the Law.

opportunity to take rest breaks or vary the work there is an increased risk of muscular pain and strain.

Characteristics of the Load and Equipment

In addition to the weights and forces you need to consider the size, shape, texture, stability and temperature of the load. Also consider whether there are grips and handles to assist in moving the load. When handling “live loads” such as a person or an animal there is an added risk of unexpected movements. Often “live loads” require special care during handling due to the person or animal suffering from fear, discomfort or agitation as a result of injury, illness or being affected by drugs.

Work Organisation

The risk of injury may influence the way in which the work is organised and includes:

- the number of staff available to do the work
- the type and availability of equipment
- deadlines or production targets
- the pace of work
- the opportunity to do tasks requiring different physical demands
- the opportunity to take rest breaks.

Skills,experience and Personal Factors

The physical conditions of individual employees may make it more difficult to adopt a comfortable posture while carrying out a task e.g. pregnancy or a limitation in movement, as occurs with an injury or disability affects the posture. Also, young workers may be at greater risk if they are still developing physically. For older workers, as age increases, wear and tear injuries are more common. However, assessments of risk based on age alone, are not adequate.
Other personal factors that will influence the risk of manual handling injury include:

- strength and degree of bodily development
- general state of health and fitness
- physical dimensions, such as height, reach and hand grip size
- physical readiness to carry out the work e.g. if an employee has just returned from an extended period of leave they are likely to be less physically prepared for the task.

The type of clothing worn by an employee may hinder safe manual handling e.g. tight clothing can restrict movement, or personal protective equipment may interfere with the task.

Working Environment

The working environment includes factors such as extremes of temperature, uneven floor surfaces and poor housekeeping. If the manual handling task is carried out close to sources of heat, cold or vibration, this may add to the physical load on the body.

This document is the property of SPCC who will safeguard its rights according to the civil and penal provisions of the Law.

The physical environment can affect the postures adopted by the employee e.g. handling a dirty, hot, cold or sharp object may cause the person to carry the load away from the body. If prolonged, heavy manual work is carried out in a hot or humid environment, this will increase fatigue, making handling movements less coordinated. Uneven floors may prevent the use of trolleys or other handling equipment and also increase the risk of slips and trips e.g. a worker is likely to use extreme postures or movements or greater than necessary force to complete the task such as pushing a trolley or cleaning the floor.

The risk assessment must consider all of the risk factors relevant to the task.

5.7 CONTROLLING THE RISK

Control measures must be determined, based on their order of effectiveness in reducing the risk. Firstly, it must be determined whether the risk can be eliminated by either:

- altering the workplace design
- altering the systems of work used to carry out the task
- changing the objects used in manual handling in your workplace (e.g., by changing the size or weights of objects handled, or attaching handles).

The tasks you have assessed as high risk require attention first. Where practical to do so the first priority is to eliminate the risk. If that is not feasible, then the risk must be reduced as far as reasonably possible. Employers have a duty to control the risk of injury. Some options to consider in developing your solutions include:

- using the risk management approach
- consulting with designers and manufacturers who supply products for use in your workplace
- looking at solutions used across your industry
- seeking advice from specialist professionals such as ergonomists and engineers.

5.8 CONSULTATION

A team approach is the most effective way of deciding suitable control measures. When determining the controls to be used, health and safety representatives and those doing the job must be consulted. This type of involvement brings in their knowledge and experience of the task and helps to identify potential complications. When determining suitable controls it is important to come up with as many ideas as possible.

Only when it is established that risk control measures for changing design or using mechanical aids are not practical, can you rely purely on information, training or instruction in manual handling techniques to control the risk. If training is used as the primary control you must consider longer-term changes to improve the situation.

What can be changed ?

This document is the property of SPCC who will safeguard its rights according to the civil and penal provisions of the Law.

Solutions must deal with all of the risk factors you identified when you assessed the task. You may find it worthwhile to consider changes to a number of the contributing factors. It is not adequate to alter only the factor that contributes most of the risk although, of course, it is the one that requires attention first. However, the risk assessment will have highlighted the factors that require attention. The following list considers possible changes to risk factors, to improve the task.

a) Workplace layout

Altering the layout of the plant, equipment and furniture in the workplace can greatly improve the workflow and reduce the risk from manual handling. This should also include attention to housekeeping and maintenance of equipment.

Good design principles should be applied to the design of work-stations. One characteristic of a well-designed workstation is that the operator can work in an upright posture, with the shoulders resting and the arms close to the trunk. The working height should be about level with the employee's elbows, whether the work is being done from a seated or standing position. If the work involves handling weights, then the work surface should be about 2-3 cm below the elbow height.

The most effective way of ensuring that all employees are protected from the risk of musculoskeletal injury is to provide adjustable work stations so that employees are able to adjust working heights to suit their needs.

b) Changing the object

Changing the size, shape and weight of the object must be considered when controlling manual handling risk. The weight of the object is very important as it determines the amount of effort needed to move it. Consider whether the object can be repackaged into a larger, smaller or different

shape or weight. This may need to be negotiated with your suppliers. In particular, an object that is to be carried should not be larger than 50 cm in depth as this places greater stress on the spine when the load is carried in front of the body and makes the load difficult to grasp securely. The

height of the load is also important as this can hinder the employee's ability to see the path ahead.

Handles are very useful for improving the stability of the load during movement, especially if the load is lifted, carried or pulled. Handles also indicate the most suitable lifting position to maintain the balance of the object.

c) Tools and equipment

This document is the property of SPCC who will safeguard its rights according to the civil and penal provisions of the Law.

Some tasks require the person to use a tool or piece of equipment. The design of these tools will determine the forces, movements and postures used by the person.

Well-designed hand tools should:

- be able to be used left or right handed
- have grips that distribute the pressure evenly over the hand
- allow neutral positioning of the wrist and arm
- be well balanced
- damp out vibration to the hands
- be as light as possible

d) Work Organisation

Employees sometimes have to work too long, or too rapidly on fast paced production lines or when trying to meet deadlines. These workers are more likely to tire, become uncoordinated and make errors. Job rotation may reduce the exposure of employees to these risk factors. This also allows employees to gain experience in a variety of job tasks e.g. people doing keyboard work could spend time doing reception tasks at the front desk. Smoothing out peak demands such as tight deadlines will also help reduce exposure to risk factors. Occasionally when it is not possible to redesign lifting tasks, it may be appropriate to use team lifting procedures. This must be organised to ensure that adequate personnel are available and trained for the task.

e) Task design

The tools, equipment and furniture selected will affect the postures and forces used by the person performing the task. Where possible, provide the opportunity for the employee to sit or stand. Tasks requiring precision, such as computer work, sewing or inspection require stability and are best done seated. Seated work is often necessary where the task requires the use of foot pedals. Seated work requires less physical effort by the body, but it is much less efficient for exerting force. Tasks requiring the use of force are best done standing, where the transfer of body weight from one leg to the other can be used. Transferring weight in this way will also help to increase the range of reach while doing the task.

Some tasks may be done either sitting or standing using a sit-stand seat. If a job has to be done standing, it is important that there is an opportunity to sit down during short breaks or there is rotation to other jobs that provide an opportunity to sit. Tasks that cause the person to work in extreme bent, twisted or stretched positions are likely to put the joints under great stress. Examples include movements and postures with severely bent wrists, the hands held above shoulder height, below knee level or outstretched. If these activities are repetitive and/or frequent the task must be changed. Design changes for these examples may include altering the angle of the tool handle, lowering high storage or raising the

This document is the property of SPCC who will safeguard its rights according to the civil and penal provisions of the Law.

worker to a more suitable working height, raising storage off the floor and providing aids such as trolleys. If the task requires postures that are both bent and twisted the risk of injury is very high and the job must be changed. Some specific examples for changing particular manual handling activities follow:

Reducing lifting and carrying

Consider using wheels, e.g. trolleys, sack trucks, forklifts or dollies. Stairs add to the risk of severe manual handling injury and should therefore be avoided, especially in high traffic areas.

If it is not possible to use wheels, then consider how the forces can be changed. Pushing forces can be reduced if a sliding task can be changed to a rolling task. Suspending a load from an

overhead track or counterbalance reduces the carrying and holding forces, but will still require pushing forces. If considering an overhead track, remember that holding and lifting forces may be required to position the load on to the track. These need to be considered in an assessment.

Consideration should also be given to whether it is possible to:

- handle objects mechanically in bulk, e.g. using a forklift to move pallets and bulk bins
- use mechanical aids to reduce the handling effort, e.g. scissor lift tables, cranes, hoists, barrel handlers, conveyors and rollers
- use gravity to assist in the task, e.g. chutes or inclined roller tables
- use pushing or pulling forces, e.g. by using ball castor tables, slides, chutes, monorails and trolleys.

Some examples of simple mechanical aids that can be used to reduce manual handling effort in lifting and carrying include:

- levers
- lifting devices, such as jacks (which should always be marked with a safe working load)
- winches
- slings and wheelbarrows

Remember that where mechanical handling equipment is used, it should be supported by an effective maintenance program. This is essential to ensure equipment is safe and serviceable at all times and does not increase the risk of injury.

Reduce upper body twisting and over reaching by:

- placing all tools, equipment controls and materials in front of the worker (within 400-mm reach)
- seating the worker on a chair that swivels
- providing adequate space to step and move to reach materials and equipment that are used less frequently
- enabling the worker to walk around the load or rotate it and
- providing knee space for seated tasks.

This document is the property of SPCC who will safeguard its rights according to the civil and penal provisions of the Law.

Reduce holding forces by:

- providing a jig to stabilise the object being assembled or the tool being used
- supporting and counterbalancing hand tools
- providing handles on the objects to be handled, e.g. by using a sling, or placing smaller items in boxes with
- cut out space for the hands.

f) Physical Environment

The physical environment can have a serious impact on the way in which manual handling is carried out in the workplace. Some examples include:

- Floor surfaces that are rough and uneven make pushing tasks more difficult e.g. pushing a trolley will require greater force to be exerted; so improving the floor surface will decrease the risk of injury and fatigue.

- Lighting will affect the postures that are adopted to carry out the task e.g. if the lighting is poor, the person may hunch over the work. If there is glare then the worker may adopt an awkward posture to avoid the glare in the line of vision. The lighting may be improved
by providing additional task lighting, providing stronger globes and moving the task from in front of windows. Providing adjustable blinds will help to reduce glare and regular maintenance of light fittings will help improve the quality of general lighting.

- Housekeeping is important to ensure clear pathways for moving around safely and covering the shortest distance. An untidy work environment increases the risk of trips and falls and is likely to limit the use of trolleys and other handling equipment.

- High temperature and humidity is likely to increase the effort required to do the task. Thermal comfort may be improved by using fans. Insulating hot or cold objects will help to protect people if they come into contact with them.

- Clothing may influence the postures and movements of a person while carrying out handling tasks. Insulated or bulky clothing will limit movements and require extra space for performing some tasks. Changing the location for the task, reducing the time spent on the task and improving the space around the task may reduce the risk of injury and fatigue.

g) Individual Factors

This document is the property of SPCC who will safeguard its rights according to the civil and penal provisions of the Law.

Individual factors include the age, skill, physical characteristics and experience of the worker e.g. young workers have a greater risk of injury than adult workers as they are still developing physically. Individuals will differ in their physical dimensions, strength and endurance. Therefore, tasks should be designed to reduce the physical effort required so that the majority of workers are able to carry out the tasks safely. Reducing the time spent in physically demanding tasks, training personnel to use equipment safely and providing extra assistance will help to reduce these risks. This may involve special training such as acquiring a forklift or crane licence.

h) Information, training and supervision

Training is essential in supporting the range of control measures that should be put in place to manage the risk of manual handling injuries. However, training is not a substitute for removing the risk and should not be used as the primary method for controlling risk (unless it can be justified that it is not feasible to change the task, provide mechanical assistance or redesign the work area). Training should cover issues that are specific to the task to enable the worker to develop skill in performing that task. Your risk assessment should have highlighted a range of factors for which training needs to be provided.

Training is an important part of an overall risk management plan, but if most of your control measures are based on training you may be relying on the workers to practise safe behaviour while working in a hazardous environment. It is more effective to improve the working environment by reducing the risk through redesign and providing equipment.

Correct Posture Considerations

Posture and stress on the spine

The section of the cervical spine and back, in addition to being solicited from normal activity, particularly between the positions for a long time that is exerted traction on the spinal roots and nerve coverings (in flexed position) and a possible compression of the vertebral artery (in extended position), is also suffering from the pull exerted by the weight of the upper limbs on the area that connects the region with the cervical rib.

Example of postures that seek constantly the cervical and dorsal

This document is the property of SPCC who will safeguard its rights according to the civil and penal provisions of the Law.



Fixed positions should be correct and physiologically interrupted frequently, at least every hour, assuming positions of relaxation of the cervical and dorsal and possibly performing simple exercises, joint mobility and stretching.

The lumbar spine is usually the most stressed because almost all the weight of the trunk hanging over it.

In cases where the curvature is very strong, the load can not occur evenly distributed across the inter-vertebral disc, but serious "edge" on the back edge. Over time, both because of this physiological situation, both the aging of cartilage, mechanical situations can arise that compress the nerves and thus cause the onset of pain. In this situation you may feel pain even just extending the spine backward. The sitting position, however, due to the straightening of the lumbar spine, reduces pain.

An exercise aimed at strengthening the muscles that tend to rotate your pelvis tilt (abdominal and extensor of the thigh on the pelvis) and, therefore, reduce the lumbar curve, can give surprising results.

Held in the upright position for a long time you should use a small rise of 20-30 cm placed under one foot, alternating the position periodically with each other. This allows to reduce the lumbar lordosis and download your own body weight on lumbar discs in a uniform manner.
Women should absolutely avoid wearing shoes with heels higher than 3 cm. In fact, high heels moving forward center of gravity to compensation that involves forcing a buckle of the lumbar spine.

During bed rest should be avoided completely prone position (belly below)

If the curvature is less pronounced than saline we are faced with a situation of weakening

This document is the property of SPCC who will safeguard its rights according to the civil and penal provisions of the Law.

of back muscles and the pain appears mainly in the position of flexion of the torso forward and in the sitting position.

In this case, the gymnastic exercises are aimed at strengthening the muscles of the abdomen and back of thigh muscles that tend to bring the pelvis ante-version (flexor of the thigh).
Held in the posture for a long time you should assume a sitting position on chair fitted with a special rigid lumbar support and to engage in motion at any time of day.

Example of postures that stress constantly lumbar

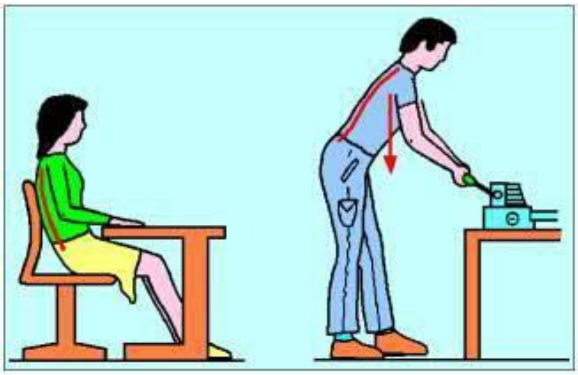

Example of correct postures

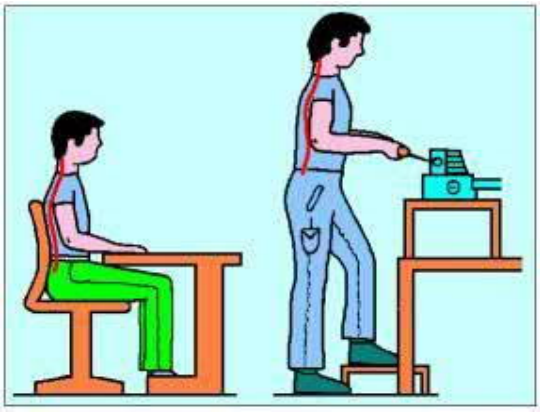

Lifting and moving loads

Jacking up a weight should adopt some aspects of the techniques of the discipline of lifting weights, or the possibility of expressing the maximum strength with minimum load on the spine. Therefore be avoided positions that see the torso leaning or bent and legs extended, back pain is a significant load.

This document is the property of SPCC who will safeguard its rights according to the civil and penal provisions of the Law.

To do a proper lift the weight that must be approximated as closely as possible, bend your legs and keeping your upper body and the more extended perpendicular to the ground, grasp the weight and keeping it close to your body, bring it up, using the strength of the lower limbs stretching. Throughout the movement, the feet should remain flat on the ground well on the whole plant, avoiding twisting of the torso. If the object is heavy should not be carried beyond the height of the basin.

When moving a large object (eg, refrigerator, washing machine, furniture, etc..) Rather than push people face, we should push with the rear seats in full support of the bust (backs and loins) on the object, using only the force extension of the lower limbs. Also in the baggage is preferable to symmetrically in two suitcases or bags, a right and a left, then double the load on the spine, which is still distributed evenly, rather than carrying a bag with one hand, a situation which calls for greatly paravertebral muscles of the opposite side where the contraction of balance creates additional loads on the vertebrae.

Proper mode to lift or move a weight



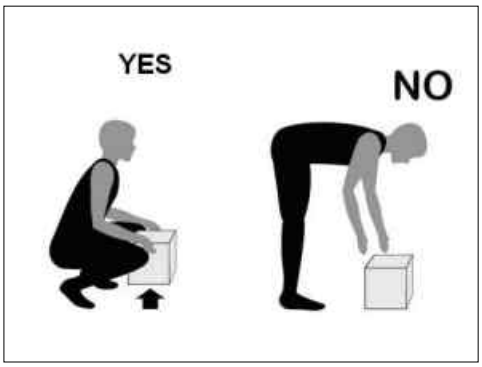

This document is the property of SPCC who will safeguard its rights according to the civil and penal provisions of the Law.

Pressure on the lumbar spine in various positions to move a load

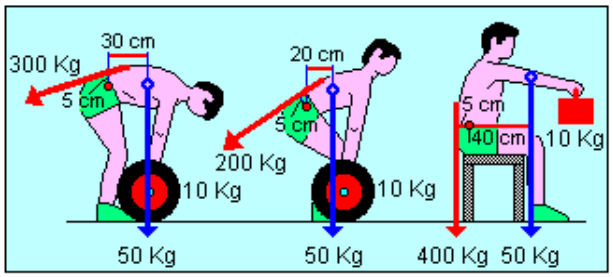

Proper mode to carry a suitcase

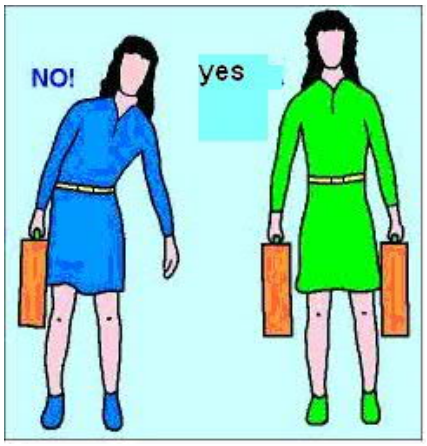

Pressure on the lumbar vertebrae in the transport of a load

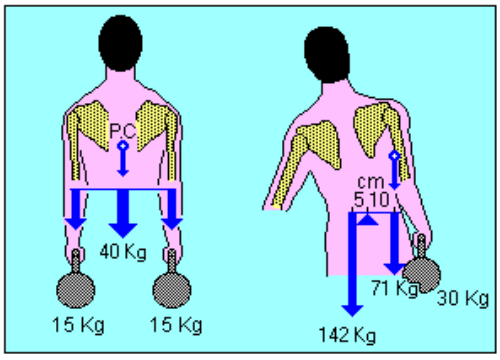

This document is the property of SPCC who will safeguard its rights according to the civil and penal provisions of the Law.

PTTLNG Nong Fab LNG Receiving Terminal Project

SHE PROCEDURES (MARINE WORKS)

Doc. Class Z

This document is the property of SPCC who will safeguard its rights according to the civil and penal provisions of the Law.

Revision list:

Rev. Nr	Modifications:
R1	First Issue

TABLE OF CONTENTS

1 PURPOSE 252

2 REFERENCE 252

3 RESPONSIBILITIES 252

4 INTRODUCTION 252

5 GENERAL REQUIREMENTS 253

6 PERSONAL AND GENERAL PROTECTIVE EQUIPMENT FOR BOATS AND JETTIES 253

7 TRANSPORTATION BY BOAT 254

8 USE OF BOATS 256

9 WORKING SURFACES OF BARGES 256

10 MATERIAL HANDLING OPERATIONS OVER WATER 256

11 ELECTRIAL CONSIDERATIONS 257

11.1 Equipment 257

11.2 Reduce the voltage 258

11.3 Provide a safety device 258

12 EMERGENCIES 258

This document is the property of SPCC who will safeguard its rights according to the civil and penal provisions of the Law.

1 PURPOSE

The purpose of this procedure is to detail the steps to be taken to ensure the health and safety of personnel directly involved in work over or adjacent to water, and others who may be indirectly affected by this activity.

2 REFERENCE

- STD-COR-HSE-016
- STD-COR-HSE-005

3 RESPONSIBILITIES

SUBCONTRACTOR Site management shall:

- Take overall responsibility for ensuring sufficient resources are made available for the correct implementation of this procedure.
- lead by example and ensure that all persons within their control or influence comply with this procedure.

SUBCONTRACTOR Supervisors shall ensure that:

- the work area is maintained in a safe and healthy manner at all times;
- personnel receive sufficient instruction and training to enable them to understand and follow this procedure;
- proper risk assessments are carried out and information is given to the workers;
- proper personal protective clothing is provided;
- emergency equipment is provided;
- proper communication with the emergency boat is maintained;
- carry out 1 emergency drill per month as a minimum;
- reasonable recommendations for improving health and safety are complied with at the earliest opportunity.

SUBCONTRACTOR Safety Management shall ensure that:

- a tool box talk (TBT) is prepared on work over water for supervisors to use;
- sufficient training material is available;
- periodically audit to verify that this particular aspect of the overall management system is being implemented;
- provide such support and advice as is necessary.

4 INTRODUCTION

This procedure shall apply to all work over or adjacent to water.

This document is the property of SPCC who will safeguard its rights according to the civil and penal provisions of the Law.

All personnel employed to carry out work over water, docks and wharves shall comply with all the requirements of this procedure.

Should discrepancies or non-compliance be recognized during the activities, corrective action (which may include stopping work activities) shall be implemented immediately.

These rules and regulations shall be implemented, in addition to any other applicable rules published in this program, where work is performed over or near water; where the danger of drowning exists.

In addition, SUBCONTRACTOR will comply with international developments in diving to ensure the most advanced diving techniques are employed.

5 GENERAL REQUIREMENTS

Subcontractor must carry out a suitable risk assessment in accordance with Regulations and their own HSE Management Plan.

The risk assessment must identify foreseeable hazards, assess the level of any associated risks and identify measures necessary to prevent or adequately control the risk.
Where there is a foreseeable risk of drowning, not controlled by any other means, suitable personal buoyancy equipment must be provided for, and worn by, employees.

6 PERSONAL AND GENERAL PROTECTIVE EQUIPMENT FOR BOATS AND JETTIES

Employees working over or near the water, where a danger of drowning exists, shall be provided with, and required to wear, approved Personal Protective Equipment.

The minimum requirement for personal protective equipment is as follows:

- A life jacket conforming to a recognized US or British standards or buoyant work vest (life preserver or buoyancy aid);
- An approved safety helmet.
- An approved pair of safety spectacles with side shields.
- Approved safety footwear.
- A full body safety harness attached to a suitable anchorage at all times (Requires the use of two lanyards not exceeding 1.6 meters in length).
- Hand protection suitable for the task being undertaken.
- Respiratory protection where deemed necessary.

All safety equipment used by SUBCONTRACTORS for the construction and pre- commissioning of the docks, loading jetty and / or the wharf, etc. shall be inspected and approved before commencement of the job

Life jackets are required under the following circumstances:

* While working/or riding on boats, barges or vessels.

This document is the property of SPCC who will safeguard its rights according to the civil and penal provisions of the Law.

- While transferring to or from any boat.
- When working on any structures over water.
- When handling lines, hose or other devices from a boat or barge.
- When transferring material or equipment from one vessel to another, or to a fixed structure.

- Riding in an open boat or when outside the cabin or wheelhouse of any other type boat.
- Working on the deck of any barge, especially during rough seas. (This is to be determined by the supervisor in charge.)
- On pontoon lines, rafts or any other piece of floating equipment.
- While engaged in any work over the side of any vessels.
- At any other time when the supervisor in charge deems it necessary.

Life jackets are examined prior to each use and defective units discarded.

Ring buoys with at least 27 meters of line shall be provided and readily available for emergency rescue operations; distance between ring buoys shall not exceed 61 meters.

The suitable emergency boat must be readily accessible at all times where employees are working over or adjacent to water; it shall be equipped with at least one boat hook and one ring buoy with 50 feet of 3/8-inch polyester rope and where necessary an operational radio in contact with the supervisor on duty.

Prior to and after each use, the buoyant work vests or life preservers shall be inspected for defects which would alter their strength or buoyancy (defective units shall not be used);

A fence or barrier must be provided to any structure or scaffold where there is a risk of persons falling from such structures into water;

Where an independent electrically or mechanically operated hoist or cradle is used a competent operator must be provided, or sufficient training be given in its use (some means of communication is to be provided for use in an emergency);

Any hoist/cradle is to be checked, maintained and inspected/examined as per manufacturers or statutory requirements;

Warning signs/notices are to be displayed;

- Lighting buoyancy with construction sign board are required to install for indicating of marine construction boundary

"During Jetty construction through the seabed of the natural gas pipeline " shall:

- Install buoy to indicate the natural gas pipeline which 30 meters in distance.
- Define safety distance from natural gas pipeline for at least 10 meters in length for each side. Anchoring and seabed disturbance/construction in this area is prohibited.

This document is the property of SPCC who will safeguard its rights according to the civil and penal provisions of the Law.

There is to be adequate lighting for the whole of the period of work (lighting must be adequate for night work and must illuminate the immediate surrounding water surface).

7 TRANSPORTATION BY BOAT

All boats shall be equipped with handrails and shall be duly registered and carry valid certificates.

Every marine craft shall carry the appropriate safety equipment listed in the survey certificate and these shall be readily accessible and in good condition; the crew shall be trained in their use.

All craft shall carry an adequate number of life jackets to cover the maximum authorized number of passengers plus crew.
The Quartermaster shall ensure that boats berth properly in areas designated for them and are secured before passengers and crew are allowed to embark or disembark, using a well established, safe access.

Every craft shall be navigated in accordance with safe speed regulations so as to prevent obstructions, damage or danger to any other vessel or person.

Craft shall be used only for authorized work activities; night work shall have prior approval.

Passengers and crew shall wear life jackets at all times when they are aboard water-craft.

All life saving equipment shall be in good condition, and free from defects that are likely to reduce their effectiveness in any way.

Life Jackets aids shall be kept readily accessible in case of emergency (preferably one under each seat).

Signs denoting the location of Life Jackets shall be clearly visible.

Fire extinguisher equipment shall be sufficient to extinguish all types of fire likely to be encountered on the craft; they shall be readily accessible, free from obstruction and their locations clearly marked by adequate signs, inspected on a monthly basis by a competent person, and marked accordingly.

All mechanical, electrical and safety systems shall be maintained in accordance with the manufacturers instructions, and a log kept of all maintenance and repair activities.

Emergency flares shall be stored in a safe and accessible compartment of the craft, to be used to attract attention and assistance should the craft suffer a mechanical failure or otherwise be endangered.

The one person in charge of the craft shall be a competent and authorized seafarer to

This document is the property of SPCC who will safeguard its rights according to the civil and penal provisions of the Law.

be employed in the position of captain.

The captain shall be qualified in the use of all the above-noted equipment.

Every marine craft shall be equipped with a communications system to facilitate communications.

This document is the property of SPCC who will safeguard its rights according to the civil and penal provisions of the Law.

8 USE OF BOATS

When dredge discharge or other pipelines are used as walkways, they shall be provided with a flat surface walkway at least 30cm wide, securely anchored to the pipeline.

A railing providing at least a single rail or taut rope 107cm high, and of adequate strength, must be provided along one side. If rope is used it shall be the equivalent of 3/4-inch (19 mm) diameter polyester or 3/8-inch (10 mm) wire rope.
Catwalks or platforms must be at least 51cm wide with guardrail provided at all locations where men are regularly employed over bodies of water more than four feet deep.

Planks for such use shall be rough sawn, pressure-treated material or equivalent in those locations where subject to submersion.

Life vests and ring buoys or other equivalent protection, such as properly secured lifelines, safety harnesses and approved descent-control device shall be used for painting and maintenance work.

9 WORKING SURFACES OF BARGES

Employees must not be permitted to walk along the sides of covered lighters or barges which do not have five feet high unless a three-foot clear walkway, or a grab rail, or a taut handline is provided.

Decks and other working surfaces are to be maintained in a safe, non-slippery condition.

Employees are not permitted to pass fore and aft, over or around deckloads.

Employees are not permitted to walk over deckloads from rail to coming unless there is a safe passage.

If it is necessary to stand at the outboard or inboard edge of the deckload where less than 50 cm of bulwark, rail, coming or other protection exists, all employees are provided with a suitable means of protection against falling from the deckload.

10 MATERIAL HANDLING OPERATIONS OVER WATER

Access to barges or vessels:

This document is the property of SPCC who will safeguard its rights according to the civil and penal provisions of the Law.

- the barge or vessel must be safely secured prior to the transfer of any equipment or personnel;
- ramps for access of vehicles to or between barges must be of adequate strength, provided with side boards, well maintained, and properly secured;
- unless employees can step safely to or from the wharf, float, barge, or river towboat, either a ramp or a safe walkway is provided;
- jacob's ladders must be of the double rung or fiat read type (they are to be well maintained and properly secured);
- obstructions must not be laid on or across the gangway;
- the means of access must be adequately illuminated for its full length;
- unless the structure makes it impossible, the means of access is located that loads will not pass over employees.

11 ELECTRICAL CONSIDERATIONS

Electrical equipment must be restricted to low voltages.

The use of any electrical equipment is to be strictly controlled and steps are to be taken to ensure that leads are not long enough to touch the water.

All equipment should be connected to lines to prevent their accidental dropping into water causing possible electric shocks etc.

11.1 EQUIPMENT

Provide safe and suitable equipment:

- choose equipment that is suitable for its working environment;
- electrical risks can sometimes be eliminated by using air, hydraulic or hand-powered
- tools (these are especially useful in harsh conditions);
- ensure that equipment is safe when supplied and then maintain it in a safe condition;
- provide an accessible and clearly identified switch near each fixed machine to cut off power in an emergency;
- for portable equipment, use socket-outlets which are close by so that equipment can be easily disconnected in an emergency;
- the ends of flexible cables should always have the outer sheath of the cable firmly clamped to stop the wires (particularly the earth) pulling out of the terminals;
- replace damaged sections of cable completely;
- use proper connectors or cable couplers to join lengths of cable (do not use strip connector blocks covered in insulating tape);
- some types of equipment are double insulated (these are often marked with a ‘double-square’ symbol; the supply leads have only two wires – live (brown) and neutral (blue);
- make sure they are properly connected if the plug is not a moulded-on type;

This document is the property of SPCC who will safeguard its rights according to the civil and penal provisions of the Law.

- protect lightbulbs and other equipment which could easily be damaged in use (there is a risk of electric shock if they are broken);
- electrical equipment used in flammable/explosive atmospheres should be designed to stop it from causing ignition. You may need specialist advice.

* Earth Leakage Circuit Braker (ELCB) shall be used for all electrical panel boards.

11.2 REDUCE THE VOLTAGE

One of the best ways of reducing the risk of injury when using electrical equipment is to limit the supply voltage to the lowest needed to get the job done, such as:

- temporary lighting can be run at lower voltages, eg 12, 25, 50 or 110 volts;
- where electrically powered tools are used, battery operated are safest;
- portable tools are readily available which are designed to be run from a 110 volts centre-tapped-to-earth supply.

11.3 PROVIDE A SAFETY DEVICE

If equipment operating at 230 volts or higher is used, an RCD (residual current device) can provide additional safety.

An RCD is a device which detects some, but not all, faults in the electrical system and rapidly switches off the supply.

The best place for an RCD is built into the main switchboard or the socket-outlet, as this means that the supply cables are permanently protected.

If this is not possible a plug incorporating an RCD, or a plug-in RCD adaptor, can also provide additional safety.

RCDs for protecting people have a rated tripping current (sensitivity) of not more than 30 milliamps (mA).

Remember:

- an RCD is a valuable safety device, never bypass it;
- if the RCD trips, it is a sign there is a fault (check the system before using it again);
- if the RCD trips frequently and no fault can be found in the system, consult the manufacturer of the RCD;
- the RCD has a test button to check that its mechanism is free and functioning (use this regularly).

12 EMERGENCIES

All personnel are to be instructed as to means of raising alarm and rescue drills.

This document is the property of SPCC who will safeguard its rights according to the civil and penal provisions of the Law.

Persons shall be required to sign in and out of work site (log book) as a means of controlling the area.

A nominated responsible person has to make regular and frequent checks on numbers of personnel working against the log book entries.

Any works over water are to be carried out by a minimum of two persons, no lone workers are permitted.

Special care must be taken during inclement weather conditions, when extra checks are to be made by the site supervisor.

Subcontractors are to carry out regular emergency drills to ensure personnel are well aware of the procedures.

This document is the property of SPCC who will safeguard its rights according to the civil and penal provisions of the Law.

PTTLNG Nong Fab LNG Receiving Terminal Project

SHE PROCEDURES (NOISE)

Doc. Class Z

This document is the property of SPCC who will safeguard its rights according to the civil and penal provisions of the Law.

Revision list:

Rev. Nr	Modifications:
R1	First Issue

TABLE OF CONTENTS

1 PURPOSE 262

2 REFFERENCE 262

3 INTRODUCTION 262

4 RESPONSIBILITIES 263

5 INSTRUCTIONS 263

This document is the property of SPCC who will safeguard its rights according to the civil and penal provisions of the Law.

1 PURPOSE

The purpose of this procedure is to outline the hazards associated with noise and the preventative measures to be taken to reduce risk to health during the construction activities.Covers all areas where the work is being carried out and includes consideration for adjacent populated areas.

2 REFFERENCE

- STD-COR-HSE-016
- STD-COR-HSE-005

3 INTRODUCTION

The phenomena of noise induced hearing loss has only, relatively speaking, been recently analysed and understood.

The factors of working in industries where high levels of noise are generated are now clearly understood, and the long term consequences created from working in such high risk environments placing greater levels of care on employing companies.

The physiological damage of working in environments where high levels of noise exists, can be simply explained as the damage caused to the fine hairs in the Cochlea, part of the hearing mechanism sited in the inner ear.

These hairs are joined to nerves transmitting the sensation of hearing to the brain, prolonged exposure to high levels of noise will result in auditory fatigue and eventual failure of function for those fine hairs.

This may result in temporary deafness called a 'Temporary Threshold Shift' or permanent deafness which includes the occupational illness of 'Noise Induced Hearing loss'.

- Noise is defined as unwanted sound, which at certain volume levels may cause irreparable damage to hearing.

- Frequency is the pitch measured in Hertz, calculated from the rate of pressure fluctuations of sound waves.

- dB refers to a unit of sound pressure fed into an electronic weighting network and providing an approximate sound level calculated over the total frequencies.

- dB (A) refers to the characteristics of sound which are filtered to replicate the noise heard by the human ear.

This document is the property of SPCC who will safeguard its rights according to the civil and penal provisions of the Law.

- Attenuation is the reduction of noise achieved by hearing protection, each type of ear protector should have attenuation tables which illustrate the noise reduction at different frequencies. e.g. 30 dB(A) at 5,000 Hz.

4 RESPONSIBILITIES

Contractor and subcontractors Supervision:

- supervision when planning the work shall take into account the anticipated noise levels that persons under their control may be exposed to;
- where any concerns exist shall consult with the Contractor Field S H E Manager and arrange for a noise analysis to take place;
- will provide adequate and suitable hearing protection for the work being performed recognising the attenuation factors of different ear protectors.

Contractor Field SHE Manager:

- shall advise on the procurement of hearing protection;
- shall carry out noise assessments where and when necessary, and produce noise contour maps with octave band frequencies analysed;
- shall ensure that the appropriate signs are displayed for areas where high levels of noise exist;
- prepare toolbox talks and other training material for briefing the workforce.

5 INSTRUCTIONS

The action point for noise on the Project is 85 dB(A), noise levels 85 dB(A) and over will require the provision of signs, mandatory hearing protection and an analysis of the noise emissions.

The maximum noise levels to which anyone may be exposed is related to the exposure duration, see table 1.

When personnel are exposed to high levels of noise will require screening to assess if any impairment has occurred.

In each case when the noise is up 85 dB(A) also if for a short time is recommended the use of the hearing protectors (ear-muffs or ear-plugs).

In areas where noise may interfere with communications, suitable alternative arrangements shall be in place for alerting the work parties in the event of an emergency.

This document is the property of SPCC who will safeguard its rights according to the civil and penal provisions of the Law.

Absolute noise limit

Under foreseeable working conditions, NO PERSONS SHOULD BE EXPOSED TO STEADY NOISE LEVELS ABOVE 115 dB(A) irrespective of duration, OR TO IMPULSE NOISE LEVELS ABOVE 135 dB(A), with or without hearing protection. Such levels may cause irreparable damage to hearing and also may lead to panic reactions.

Work area noise limit

The recommended work area noise limit at design is 85 dB(A).

The work area is defined as any position not less than 1 m from equipment surfaces accessible to personnel, or any position where a worker's ear may be exposed to noise in the normal course of his duty. The design limit should always take into account all operating modes which can be expected in a properly functioning installation.

For existing plant, the limit for workers not wearing hearing protection is 90 dB(A), irrespective of duration of exposure

Noise control at source

Plant noise should be reduced to the lowest practicable levels,Priority should be given to reducing noise levels where they exceed 85 dB(A).With the help of noise dosimeter survery shall be carried out and suitable control measures shall be implemented in site.

Hearing protection

Ear protectors should be available for use in all areas with noise levels above 80 dB(A).For areas where noise levels are between 85 and 90 dB(A), two options are available :

- to signpost the area at the 85 dB(A) level and prescribe obligatory permanent use of hearing protection,

or

- to specify in the work permit, on a per case basis, when hearing protection must be used, on the basis that workers should not be exposed to a daily noise dose exceeding 85 dB(A).

The use Ear protectors is mandatory in areas where noise levels are 85 dB(A) or above

Ear protectors should also be worn by persons exposed to high noise levels which are produced not by machinery or work environment, but by the task carried out, e.g. by use of hand-held tools.

Audiometry

Any person, whose job has been identified to be liable to a daily noise dose exceeding 80 dB(A), should be monitored by means of audiometry.

For groups of workers, the risk of hearing loss resulting from occupational noise exposure (independent of other causes such as ageing) can be assessed statistically. Data for hearing loss as a function of noise dose and years of exposure, are given in ISO standard 1999 (1975) [Ref. 2].

This document is the property of SPCC who will safeguard its rights according to the civil and penal provisions of the Law.

The loss of hearing as a result of noise is determined by the individual's personal susceptibility and exposure, at work and elsewhere. Controlling occupational noise exposure will not affect individual susceptibility or non-occupational exposure. Thus, on its' own, no standard for limitation of exposure to noise at work can guarantee complete protection in individual cases. The recommended noise limits above are based on noise level, duration of exposure and expected effects.

Recording of Associated Information

Each noise level or noise exposure measurement relates to a particular set of operating and other circumstances. Accordingly, it is essential that sufficient information is recorded so that each individual result is fully defined as a specific event. This is important not only to help in the immediate assessment of the data, but also for possible subsequent comparison purposes. (Appendix 1)

PERSONAL PROTECTION

Types of Personal Hearing Protective Devices

There is a wide selection of hearing protective devices available and these fall into two categories, namely ear plugs and ear muffs. The extent of the protection that can be achieved by wearing the devices correctly is expressed in terms of frequency-related attenuation data. This information should be provided by the supplier in graphical or tabular form, showing the mean attenuation and the standard deviation at each test frequency.

Ear Plugs

An ear plug fitted inside the external auditory canal provides a physical barrier to noise. However, to be effective a close fit must be achieved and therefore the plug may be slightly uncomfortable.

The use of ear plugs also presents potential hygiene problems, by contamination of the external ear canal, e.g. from greasy or dirty hands. Although most re-usable plugs are produced with insertion tabs to assist with handling, they should only be handled with clean hands. Individuals with chronic or acute external ear conditions or congenital malformations may not be suitable candidates to wear ear plugs.

Ear Muffs

A large number of models of ear muffs are available, all basically of similar construction. A pair comprises two rigid plastic cups, each fitting over an external ear, connected by an adjustable head or neck band. The seal between the head and cups is achieved by soft cushions attached to the cups and filled with either foam or fluid. Although the latter is more efficient, damage to a fluid-seal can result in leakage of the liquid and consequent reduction in effectiveness. Prolonged use of foam-seal, on the other hand can adversely affect the elasticity, thereby reducing the efficiency. The cups are lined with sound absorbent material, foam, to reduce high frequency resonance within the enclosures.

This document is the property of SPCC who will safeguard its rights according to the civil and penal provisions of the Law.

Combination of Ear Plugs and Ear Muffs

Sometimes it is necessary to provide personal protection for work in areas where very high noise levels prevail. If ear muffs provide insufficient protection, a combination of ear plugs and ear muffs may be advised.

However, the overall attenuation given is not the arithmetic sum of the attenuation provided separately by each of the devices, because of transmission of sound by other routes e.g. via bone conduction. An attenuation of 5-7 dB(A) above that provided by ear muffs alone is normally achieved.

On below table there are the approximate noise values associated with construction equipment, and noise limitations and requirements.

Table 1 –Recommended standard: occupational noise exposure

Table 1–1. Combinations of noise exposure levels and durations that no worker exposure shall equal or exceed

Exposure level, L (dBA)	Duration, T			Exposure level, L (dBA)	Duration, T		
	Hours	Minutes	Seconds		Hours	Minutes	Seconds
80	25	24	—	106	—	3	45
81	20	10	—	107	—	2	59
82	16	—	—	108	—	2	22
83	12	42	—	109	—	1	53
84	10	5	—	110	—	1	25
85	8	—	—	111	—	1	11
86	6	21	—	112	—	—	56
87	5	2	—	113	—	—	45
88	4	—	—	114	—	—	35
89	3	10	—	115	—	—	28
90	2	31	—	116	—	—	22
91	2	—	—	117	—	—	18
92	1	35	—	118	—	—	14
93	1	16	—	119	—	—	11
94	1	—	—	120	—	—	9
95	—	47	37	121	—	—	7
96	—	37	48	122	—	—	6
97	—	30	—	123	—	—	4
98	—	23	49	124	—	—	3
99	—	18	59	125	—	—	3
100	—	15	—	126	—	—	2
101	—	11	54	127	—	—	1
102	—	9	27	128	—	—	1
103	—	7	30	129	—	—	1
104	—	5	57	130-140	—	—	<1
105	—	4	43	—	—	—	—

This document is the property of SPCC who will safeguard its rights according to the civil and penal provisions of the Law.

Sound pressure limits according to different situation

Sound Pressure level in dB(A)	Situation
140	Jet aircraft at 30 metres
130	Pain threshold
125	Pneumatic breaker unsilenced
120	Dozer normal operation Pneumatic rock drills Scrapers
115	Dozer ripping hand held disc cutter
110	tracked loaders Tipper truck unloading and levelling hardcore Graders levelling ground
105	Wheeled excavator/loader (Trenching) Compressors (3.5m^3/min) Road roller (rolling gravel/Brick) Drilling into a concrete beam (Electric percussion drills) Diesel driven generators for arc welding Circular saws
100	Batching plant
95	Concrete mixer Loading/unloading scaffold materials
90	Electric drill under normal loading
85	The action point for mandatory hearing protection and signs
70	Noise limits for workshops and machinery buildings

This document is the property of SPCC who will safeguard its rights according to the civil and penal provisions of the Law.

PTTLNG Nong Fab LNG Receiving Terminal Project

SHE PROCEDURES (PAINTING WORKS)

Doc. Class Z

This document is the property of SPCC who will safeguard its rights according to the civil and penal provisions of the Law.

Revision list:

Rev. Nr	Modifications:
R1	First Issue

TABLE OF CONTENTS

1 PURPOSE 270

2 REFERENCE 270

3 RESPONSIBILITIES 270

4 INTRODUCTION 270

5 DESCRIPTION OF SAFETY INSTRUCTION 270

This document is the property of SPCC who will safeguard its rights according to the civil and penal provisions of the Law.

1 PURPOSE

The purpose of this procedure is to define the safety precautions to be established to ensure that all painting works are undertaken in a manner that both personnel carrying out the works and personnel working in surrounded area will not be exposed to hazards which may derive from this specific activity.

The precautions contained in this Part are designed so as to give guidance and set standards for a safe working environment for all persons involved in the use of paints and coatings.

2 REFERENCE

- STD-COR-HSE-016

3 RESPONSIBILITIES

Construction Manager is responsible for ensuring the project safety requirements and specific safety issues related to the activity considered.

Sub contractor Painting supervisor has the duty to ensure the compliance with the established schedule, project and safety requirements.

4 INTRODUCTION

Paints and coatings may contain a wide range of toxic, corrosive and flammable chemicals which may cause harm to personnel, damage equipment, and present fire and explosion risks and/or affect the environment.

The aims of this part are to:

- Provide an indication of the hazards and risks of painting operations
- Suggest types of personal protective equipment and other precautions to be used
- Provide information for personnel involved in painting tasks which can be used to minimize the hazards and risks
- Set standards for equipment to be used in painting activities.

5 DESCRIPTION OF SAFETY INSTRUCTION

LEAD PAINT: LIMITATIONS[1]

Paints or coatings containing lead application shall not be used in any installation, whether industrial, domestic or in administrative buildings. Exposure to lead and its compounds has proved harmful and carcinogenic effect.

This document is the property of SPCC who will safeguard its rights according to the civil and penal provisions of the Law.

Wet stripping or wet sanding shall be used to remove all paints or coatings on the basis that it cannot be determined, other than by a comprehensive analysis, if the previous coating contains lead. Dry sanding shall never be used.

Metal surfaces which have been determined as being previously painted with a lead based paint, shall not be cut or welded without the use of full respiratory protection.

PERSONAL PROTECTIVE EQUIPMENT (PPE)

At all times the specific instructions shall be supplied with the paint or coating regarding the use of PPE. The level of respiratory protection supplied shall be consistent with the type of paint or finish being used, its method of application (hand or spray applied) and the ventilation in the place of application. Safety goggles conforming to BS 2092.2 or an equivalent shall be worn for all spray-painting

Operations and when brush applying paints where the risk of splashing exists. At all times, PPE selection shall be determined by the line supervisor according to the pre-task risk assessment including examination of the operation, individual tasks, and potential exposures.

Where the paint vapour contains eye irritants and ventilation is limited, a full facemask with positive pressure air shall be worn in addition to other personal protective equipment.

All painters shall wear long sleeved, long legged clothing and gloves to minimise the hazards of skin contact. Gloves shall be adequate for, and resistant to, the paint, coating or solvent being used

FIRE PROTECTION

'No Smoking' and 'Flammable' safety signs shall be prominently displayed in all areas where flammable paints, coatings and associated solvents are stored, handled or used. In addition, natural or forced ventilation shall be provided to avoid the build-up of fumes and vapours to the Lower Explosive Limit (LEL).

All potential sources of ignition shall be kept away from areas where flammable paints, coatings and their associated solvents are stored, handled or used.

Dry powder fire extinguishers and foam fire extinguishers shall be kept at the worksite and readily available prior to operations where paints, coatings, and associated solvents are present.

STORAGE

This document is the property of SPCC who will safeguard its rights according to the civil and penal provisions of the Law.

Specific stores for paints, coatings and their associated solvents shall be provided. Such stores (including lockers) shall be situated in a safe area, away from active work areas, where hot work may take place. Where ever possible paint storage shall be located on a permanently supervised site and outside the battery limits of operational stations and area's.

Stores shall be of a fire resistant construction and shall conform to the guidance for handling and storage as laid down area.

WORK PRACTICES

All personnel performing painting or coating work shall be trained for the work and be aware of the hazards of the particular materials being used. Supervisor should ensure clear permit to work system is followed for all painting activity.

Care shall be taken that painting activities at no time pose a threat to other persons in the area, who are not directly involved in the activity. Barriers and warning signs shall be provided around the painting area.

Strict attention to cleanliness shall be observed in all painting and coating operations. All debris shall be collected and disposed of in accordance with local practices and procedures.[4]

Food shall not be brought into or consumed on premises where paint is stored, handled or used. Neither shall utensils or receptacles that could be used for the storage or consumption of food or drink be permitted.

Solvents shall not be used for cleansing the skin. Special skin cleansers shall be used together with skin creams to prevent excessive drying.

This document is the property of SPCC who will safeguard its rights according to the civil and penal provisions of the Law.

PTTLNG Nong Fab LNG Receiving Terminal Project

SHE PROCEDURES (PNEUMATIC TEST)

Doc. Class Z

This document is the property of SPCC who will safeguard its rights according to the civil and penal provisions of the Law.

Revision list:

Rev. Nr	Modifications:
R1	First Issue

TABLE OF CONTENTS

1 PURPOSE 275

2 REFERENCE DOCUMENTATION 275

3 RESPONSIBILTIES 275

4 INTRODUCTION 276

5 PRESSURE TESTING APPLICATION 276

6 POTENZIAL HAZARDS OF PRESSURE TESTING 277

7 PREPARATION FOR TESTING 277

7.1 Documentation 277

7.2 Equipment and materials 279

7.3 Test Assembly 279

7.4 Check test pressure calculation 281

This document is the property of SPCC who will safeguard its rights according to the civil and penal provisions of the Law.

1 PURPOSE

This Specification is to define the safety measures to be applied by SUBCONTRACTORs during the execution of pneumatic tests.

This philosophy defines the requirements for pneumatic pressure testing (or pneumatic leak testing) of above ground systems (applicable to piping and piping systems within the scope of ASME, “Process Piping”) and BSI “Pressure Tests”. These tests are performed in order to ensure tightness and mechanical strength of piping and piping systems prior to commissioning by detecting and locating potential leaks.

As such tests can be dangerous , this document covers the application, preparation and procedure for pneumatic testing in the field. This document aims to ensure that potential hazards to personnel and assets are properly managed during such operations.

Considering the high risks for pneumatic test execution following instruction must be strictly respected.

2 REFERENCE DOCUMENTATION

Codes and Standards

ASME B31.3 2008	Process piping, ASME Code for pressure piping
B.31 ASME B16.5a	Pipe flanges and flanged fittings
BS EN 837	Pressure gauges
BS EN 1473-2007	Installation and equipment for liquefied natural gas, design for onshore installation
ASME VIII	Rules for construction of pressure vessels
NFPA 59A-2009	Standard for the production, storage and handling of Liquefied Natural Gas
ASME PCC-2-2018	Repair of Pressure Equipment and Piping

International HSE Management Systems Guidelines

- OHSAS 18001:2007, Occupational Health and Safety Management Systems – specification.
- ISO 14001:2015, Environmental Management Systems – Requirements with guidance for use

This document is the property of SPCC who will safeguard its rights according to the civil and penal provisions of the Law.

3 RESPONSIBILTIES

Construction Manager is responsible for ensuring the project safety requirements and specific safety issues related to the activity considered.

Construction Mechanical supervisor has the duty to ensure the compliance with the established schedule, project and safety requirements.

4 INTRODUCTION

A pressure test verifies the pressure capacity or tests the current pressure of a system. A pneumatic test is one type of pressure test. Common pneumatic measurement test equipment includes gauges that read pressure and a source of compressed gases. Pressure testing is critical in a number of industrial areas for safety reasons and in the proper functioning of the equipment.

A pneumatic test implies the fluid being used is a gas, usually air or an inert gas. In determining the pressure capacity of a system, all ports to the system are closed except one through which fluid is added until either the pressure rating for the system is achieved, the pressure cannot be achieved due to leaks in the system, or the system fails catastrophically by bursting.

A pneumatic test is inherently more dangerous than a hydrostatic test due to the higher energy content of a compressed gas, and this type of test is limited to lower pressures or smaller systems. A serious injury or death may occur due to the explosions during a pneumatic test.

5 PRESSURE TESTING APPLICATION

As pneumatic testing involves the hazard of important released energy stored in compressed gas, the base case shall be hydraulic test pressure for process systems.

Hydrostatic testing shall be used wherever possible and in preference to any other testing method. Consequently, pneumatic testing shall only be performed where hydrostatic testing is impractical or undesirable, such as:

- Pressure system designed or supported in a manner that unquestionably cannot be safely filled with liquid (e.g. low pressure piping with large diameter);
- Pressure system with a configuration such as it cannot be properly dried, and traces of the test medium cannot be tolerated (e.g. cryogenic lines);
- Small diameter piping systems such as instrument and air or nitrogen distribution;
- Pressure system which could be damaged (linings, internal insulation or other equipment) by hydrostatic tests.

Due to hazards linked to pneumatic testing activities , precautions prescribed in this document are the minimum applicable when performing pneumatic tests. However, compliance with this document does not relieve the Contractor of his responsibilities under the local regulations.

.

This document is the property of SPCC who will safeguard its rights according to the civil and penal provisions of the Law.

6 POTENZIAL HAZARDS OF PRESSURE TESTING

Even if field pressure testing operations are often considered as routine operations, several incidents have occurred during such operations. Several kinds of incidents or accidents are likely to occur during pressure testing activities on field. The two main hazards are the formation of missiles and the generation of a shock wave (a pressure wave which moves at supersonic speeds) following failure of some part of the system. The failure can involve the item being tested, the clamping equipment holding it in place or the source of pressurizing gas.

Blast Over Pressure

Rupture of a line and/or capacity can generate a shock wave which can be hazardous for personnel working around and surrounding equipment and structures. Due to the blast pressure, people can be reached by flying glass and debris or can also be thrown violently into objects. Direct effects of the blast pressure on the human bodies such as eardrums rupture, lung damage until fatality can also be experienced. Several input parameters such as pressure test, line and equipment volumes shall be used to assess blast overpressure hazard.

Missiles

Rupture of an equipment part under test can result in fragments projection potentially leading to personnel injuries and equipment/structure damage. Several input parameters such as number, shape and initial velocity of fragments generated shall be used to assess missile hazards.

Gas Jet

Effects of blast wave and fragments are obvious and well known. The effect of the gas jet is less common. It results from the emptying of the equipment and the release of the pressurized gas. In some case, the jet can still have a high velocity (>100 m/s) tens of meters away from the leak (depending on the type of rupture). As a consequence such a jet could generate a significant force on the impacted surface (equipment, or personnel). A thrust effect is also generated by the release of the gas. This could lead to the displacement of the equipment being tested (translation of a vessel, whipping effect of a pipe, etc…), and consequently to damages or injury in case of impact.

7 PREPARATION FOR TESTING

7.1 DOCUMENTATION

Test Report

This document is the property of SPCC who will safeguard its rights according to the civil and penal provisions of the Law.

The "Subcontractor execution responsible /Contractor Discipline Superintendent" shall submit to the FSHE Manager (or his representative) on site a written detailed pneumatic testing report which fully describes the methods, equipment, safety distances and precautions to be used .
This procedure shall incorporate JSEA (job safety Environmental analysis), applicable local safety regulations and include personnel training and certification, test equipment and specifications. The procedure document shall include the proposed format for the work permit and the pneumatic test certificate. Pneumatic testing operations shall not start until approval of the procedure document and work permit has been given by FSHEM on site (or his representative).

Work Permit with necessary attachments

For each test assembly, the "Subcontractor execution responsible /Contractor Discipline Superintendent" shall prepare an work permit with necessary attachments which identifies all pipe lengths and joints. These shall be marked on a drawing which accompanies the form.

Prior to initial operations and after completion of the applicable non destructive examinations (NDE) each piping system shall be tested to ensure tightness. The non destructive examinations shall be executed according to the following contractual standard:

ASME B.31.3 Ed 2008 "Process piping, ASME Code for pressure piping B.31" Chapter VI – Inspection, Examination and Testing.;

BS EN 1473-2007 Par. 9.4 "Pressure Tests"

NFPA 59A, 2016 Edition Par 9.7 "Inspection and Testing of Piping"

The appropriate test certificates and NDE reports shall be cross-referenced on the work permit. The "Subcontractor execution responsible /Contractor Discipline Superintendent" shall sign the latter form to confirm that the check has been made.

For each test assembly, the Pneumatic test responsible /superintendent shall enter the serial numbers and calibration certificate numbers of all pressure gauges, temperature instruments and recorders on the work permit.

The work permit shall additionally contain the following information for each line:

- Line number(s)
- Maximum operating pressure and temperature
- Maximum design pressure and temperature
- Minimum design metal temperature
- Required test Pressure (110% of Design Pressure).

The completed work permit shall be submitted to FSHEM for review and approval. The pneumatic test on any test assembly may not proceed until the "Subcontractor execution responsible /Contractor Discipline Superintendent" is in possession of the work permit for that assembly, signed by FSHEM.

This document is the property of SPCC who will safeguard its rights according to the civil and penal provisions of the Law.

7.2 EQUIPMENT AND MATERIALS

The "Subcontractor execution responsible /Contractor Discipline Superintendent" shall provide all pressure gauges, temperature measuring devices, recording instruments, valves, pipe work and hoses for each test.

Instrumentation

Each test assembly shall be instrumented to provide a permanent record of internal pressure and metal temperature (on a combined chart) for the duration of the test.

Additional Pressure gauges shall be of the Bourdon tube type, complying with BS EN 837. The nominal diameter of each gauge shall be 100 mm.

A valid certificate of calibration shall be available for every gauge and instrument used.

Each test assembly shall be equipped with a relief valve (or relief valve supplemented by a bursting disc), set at a pressure not exceeding 1.1 times the required test pressure. This shall be sized to suit the higher of the delivery rate of the compressed air source and the pressure increase which may occur due to a rise in temperature of 1°C per minute.

Test Medium

"Subcontractor execution responsible / Contractor Discipline Superintendent" shall provide an oil-free air compressor capable of providing clean, dry compressed air with capacity and pressure to suit the requirements of the test.

Alternatively, clean nitrogen may be used, provided that it can be supplied to the test assembly at ambient temperature or above.

The temperature of the test medium used to apply a pneumatic test is determined differently for pressure vessels and pressure systems.

Leak Testing Solution

Soapy water for detection of leaks shall be prepared in clean containers, using fresh water and an approved detergent. The maximum chloride content of the solution shall be 15 ppm.

Depressurizing Valve

The "Subcontractor execution responsible / Contractor Discipline Superintendent" shall supply a globe valve for depressurizing the assembly after test. This shall be of suitable design and materials to withstand low temperatures generated by depressurization and shall be fitted with a vent silencer, as necessary to meet plant noise limits.

7.3 Test Assembly

The extent of the test assembly, the number of pressure gauges and the required test pressure shall be identified from Figure 1 hereafter. Preparation of the assembly for test

This document is the property of SPCC who will safeguard its rights according to the civil and penal provisions of the Law.

shall be made by the "Subcontractor execution responsible / Contractor Discipline Superintendent".

Test Assembly Arrangement

The general arrangement for pneumatic testing shall be as shown in Figure 1 hereafter.

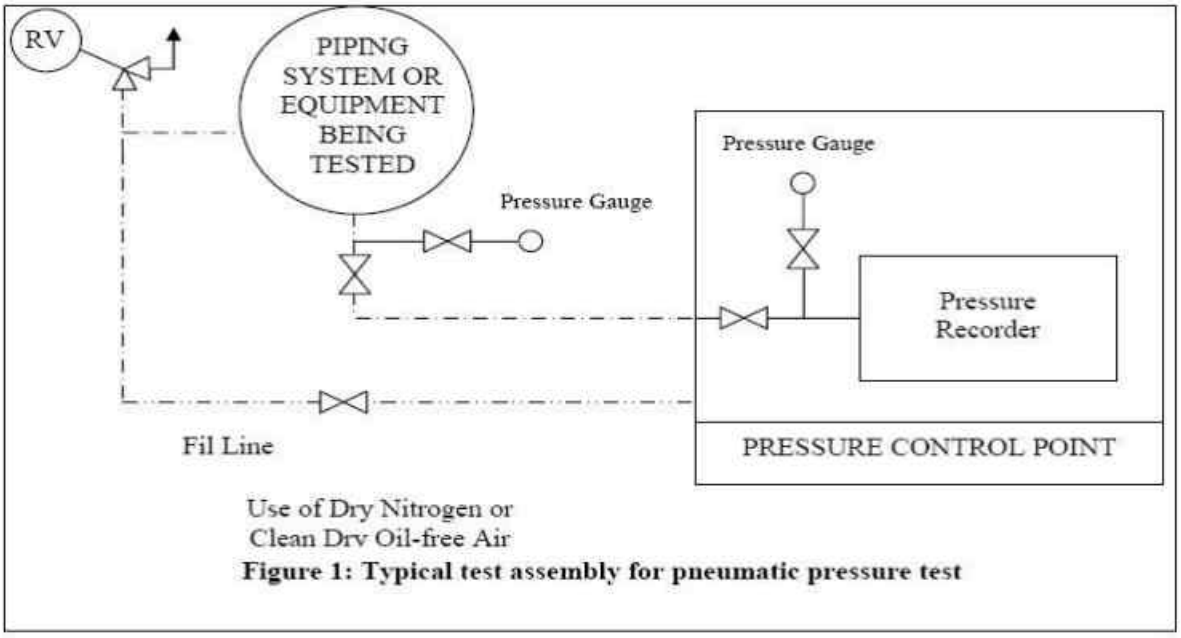

Figure 1: Typical test assembly for pneumatic pressure test

Equipment that is not to be subjected to the pressure test shall be either disconnected from the system or isolated by a blind or similar device. Valves maybe used for this purpose, provided the valve closure is suitable for the proposed test pressure. Isolated equipment and piping not being tested shall be vented.

All welded, flanged and threaded joints and connections not previously pressure tested shall be left un-insulated and exposed for examination during testing.

Pressure vessels that have been previously pressure tested greater than the system pneumatic pressure may be included in a pneumatically tested system. Pressure vessels not previously pressure tested shall not be subjected to a pneumatic test unless specific agreement is obtained from the responsible Vessel Mechanical engineer who will define the appropriate NDE requirements.

Gas used as the test medium shall not be vented in a confined area to eliminate the possibility of breathing undesirable or hazardous materials that may reside within the hardware.

Test assembly Inspection

This document is the property of SPCC who will safeguard its rights according to the civil and penal provisions of the Law.

The Contractor shall inspect the test assembly, before the starting work,

- Fabrication work is complete and the test assembly is completely and adequately supported.
- All necessary end caps, blind flanges and plugs are correctly fitted and bolted.
- Pressure temperature recorder and pressure gauges are fitted at appropriate locations, where they can be seen and read easily, remote from the test assembly. Metal temperature shall be monitored at each pressure gauge location and also at the vent connection.
- All welds are clean and free from paint, (except shop welds) grease, scale or any obstructions which could prevent them from being easily seen. The only exception shall be those longitudinal welds which have been made by the pipe manufacturer and have been already pressure tested prior to dispatch from his works.
- All necessary piping and valves are correctly fitted between the air source and the test assembly, and that depressurizing and relief facilities are in place.
- The test assembly is clean and dry, internally.

7.4 Check test pressure calculation

Piping and piping system shall be subjected to a pneumatic test at the pressure required by the drawings and specifications. As a precautionary measure against over pressuring, the following formula shall be used by the field to calculate the check test pressure.

$$Pt = 1.1 \times P$$

Where: Pt = check test pressure, psig (kPag)

P = internal design gauge pressure, psig (kPag)

If the required test pressure exceeds Pt, the required test pressure shall be verified.

Minimum Design Metal Temperature

Regarding pressure test temperature, particular care must be taken to minimize the risk of brittle failure, therefore pressurizing shall not start until the metal temperature has reached the required value or warmer.

Consideration shall be given to heat loss during the test to assure that the minimum metal temperature is retained while the piping is pressurized.

Delta temperature between metal and compressed gas should be monitored, as well as differential temperature for insulated and non-insulated portion of piping as these aspects can create stress in the material.

Because we are addressing pneumatic testing, the temperature of the metal will be dependent on several factors: if the line is insulated, except the welded joints; if not

This document is the property of SPCC who will safeguard its rights according to the civil and penal provisions of the Law.

insulated the possible temperature differential between the top and bottom of the line for large diameter piping, if the line is exposed to the sun, and temperature difference between the entry point of the pneumatic air and the furthest point from the compressor.

Safety Concern /Exclusion Zone definition Inspection

Contractor shall verify that an exclusion zone around the test assembly has been implemented and ensure that all unauthorized personnel are excluded from that area, before starting the test. Only personnel involved in the particular test operation being performed must be within the limited access area, meaning that only essential personnel shall be present within the Exclusion Zone.

A drawing indicating the location of the Exclusion Zone shall be included in the safety plan.

Moreover, to reduce potential consequences of pneumatic test accident, the test should preferably be carried out at a time when a minimum number of construction personnel are present, i.e. during weekly day off and/or during lunch time.

To ensure that hazards to personnel are minimized, exclusion zones shall be considered here as the minimum distance beyond which:

- There is no risk of significant injuries to personnel as a direct consequence of the pneumatic test failure
- There is no risk of building collapse that could significantly injure personnel
- Damage to equipments and installations is not significant enough to cause their failure and subsequent domino effects.

Safety distance during pneumatic test is going to be defined in accordance with described below procedure.

1. Based on the Appendix 501-II and 501-III of ASME PCC-2-2018, following calculation methodology is going to be applied:
    a. In accordance with ASME PCC-2-2018, para. 501-II-1, for calculation of stored energy, a volume based on the 8 largest Test Pack pipe diameters is going to be considered for calculation of stored energy;
    b. The energy released from Test Package, under pressure, during an explosion can be estimated assuming that the gas contained in the pressurized equipment expands adiabatically from test pressure to atmospheric pressure; energy stored in Test Package under pressure is going to be calculated based on following equation:

$$E = \left(\frac{1}{k-1}\right) \times P_{at} \times V \left[1 - \left(\frac{P_a}{P_{at}}\right)^{\frac{k-1}{k}}\right]$$

$$k = \frac{c_p}{c_v} = \frac{Mc_p}{Mc_p}$$

This document is the property of SPCC who will safeguard its rights according to the civil and penal provisions of the Law.

c. Stored energy have to be converted to TNT mass equivalent with following equation:

$$TNT = \frac{E}{4266920}$$

d. Safety distance is going to be calculated in accordance with below equation:

$$R = R_{scaled} \times \sqrt[3]{(2TNT)}$$

Symbols definition:

symbol	SI unit	description
E	J	Stored energy
k	$-$	Ratio of specific heat for the test fluid
$Mc_p; Mc_v$	$kJ/(kmol \times K)$	Molar heat capacity
TNT	kg	Stored energy equivalent
V	m^3	Total volume under test pressure
P_{at}	Pa	Absolute test pressure
P_a	Pa	Absolute atmospheric pressure, 101 kPa
R	m	Safe distance
R_{scaled}	$m/kg^{1/3}$	Scaled consequence factor (Table 501-III-1-1 of AMSE PCC-2-2018)

e. Calculation of safety distance is going to be done in accordance with equation indicated in point d up to energy stored in Test Package equal to 271MJ;
For energy above 271MJ, safety distance is going to be defined in accordance with EN 1473:2007 (Figure 2);

Figure 2: Recommended safety distances during pneumatic tests (EN 1473:2007)

Pressure (barg)	Distances (m)
≤ 10	30
> 10 to 22	60
> 22 to 36	90
> 36 to 52	120
> 52 to 69	150
> 69 to 80	170
> 80	Not recommended

This document is the property of SPCC who will safeguard its rights according to the civil and penal provisions of the Law.

Outside the exclusion zones, minor injuries can still occur to personnel. Buildings and equipments outside the Exclusion Zone can still be damaged, but not enough to present a direct hazard for personnel.

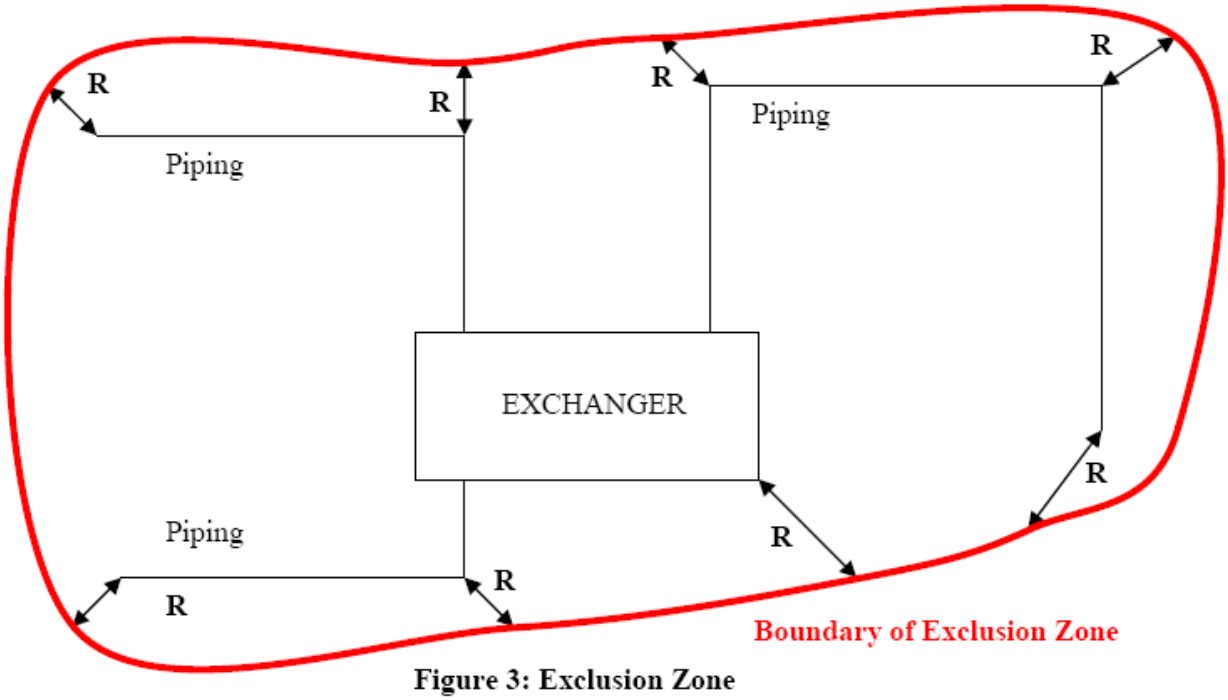

Figure 3: Exclusion Zone

The Exclusion Zone shall be flagged as in Figure 3 (e.g. delimited by red and white barrier tapes or barricaded and signed) to prevent unauthorized personnel from entering the area (e.g., signs which read 'Pneumatic Test in Progress – Access by Permission Only' - should be posted). Access Control should be provided for the test area.

Exclusion Zone application:

Distances to Exclusion Zone above defined shall be respected to ensure that potential hazards to personnel and assets are properly managed during such operations (e.g., to avoid any potential for escalations following an accident during pressure tests).

This document is the property of SPCC who will safeguard its rights according to the civil and penal provisions of the Law.

Where the safety distances found are not practicable regarding the insufficient free area around the system to be tested, a written demand shall be issued and addressed to FSHEM.

A detailed risk-based assessment of the pneumatic tests could be undertaken if deemed necessary. The pressure test shall not be performed without written authorization from SM/ FSHEM and the detailed assessment performed shall be added to the pneumatic test documents.

Mitigation /Protection Measures

To avoid any accident leading to injuries or fatalities during pressure tests, test operators must wear their appropriate PPE (face, eye and ear protection) and attend a toolbox talk and Pre Job Safety Meeting. It shall be highlighted that good coordination is essential to avoid performing the pneumatic test at the same time as other operations.

If the presence of personnel involved in the test operation in the exclusion zone is essential, adequate measures shall be taken to protect them from the effects of the potential blast and objects projections.

Protections can range from a resistant shelter, to a simple protective shield. “Subcontractor execution responsible / Contractor Discipline Superintendent” shall make sure of the efficiency of the protective measures.

If equipments, pipes, buildings or any kind of structures cannot be removed from the exclusion zone, the following measures are possible:

- Personnel inside buildings shall be evacuated
- Hazardous material, waste, etc.. shall be removed from exclusion zone
- Hazardous contents shall be removed from pipes and equipments
- Protective shield shall be applied

In any case, a written authorization from FSHEM is needed before applying any protection measures.

Mitigation to be implemented is also housekeeping, as left material could be the source for flying object in case of leakage rupture during pneumatic testing.

Test Procedures

Testing shall not be undertaken when the weather conditions may give rise to large temperature fluctuation in a short time. The pneumatic test shall be done after heat treatment, if heat treatment is required. Moreover temperature of metal shall be taken to ensure that it is warmer that the minimum temperature allowed.

After evacuation of all personnel from the test area, air shall be slowly admitted to the test assembly until the pressure attains the lesser of one-half of the required test pressure or 1.5 bar. This phase of the test is often mentioned in literature as low pressure gas leak testing and its purpose is to indicate possible failure sites in the system before high-pressure testing is undertaken.

Although the system pressure is low, this test will indicate cracks and gross porosity in welds, leakage through threaded components, and improper sealing of gaskets and other joints.

All joints, flanges and welds shall therefore be tested by applying the soapy water. Flanged joints and any weld areas which may be difficult to inspect may be tested by wrapping with a suitable

This document is the property of SPCC who will safeguard its rights according to the civil and penal provisions of the Law.

adhesive tape and applying the soap solution to a pin-hole in the tape. The tape shall not be pressed down onto the weld.

Potential leaks are indicated by the bubbles formed by the leaking gas.

The test assembly shall be held at this preliminary pressure for sufficient time to permit a thorough inspection of all joints, flanges and welds to determine the location of any leaks.

If any leak is found, the test shall be aborted, line depressurized and the leaks repaired before recommencing the test (See section 7 – Repairs).

Personnel performing tightening operations (if required) shall remain clear of the gasket plane projection. The test assembly shall not be subjected to any shock loading, such as a hammer testing.

If no leaks are found at this stage, the pressure shall be slowly increased in increments of approximately 1 bar. The pressure shall be held for sufficient time at each stage to permit piping strains to equalize.

When the required test pressure is attained, the test assembly shall be isolated from the air source (but not from the relief valve) and the pressure shall be held for at least 10 minutes before inspection to observe any fall in pressure indicative of a major leak.

This visual inspection shall be witnessed by the owner's inspection or his delegated inspector. During this time, the system test pressure gauge shall be observed from a safe distance for indication of leakage.

Consideration shall be given to the effects of ambient/metal temperature changes during this period. Personnel shall not approach the test assembly at this stage or during pressurization (see section 5.6 Exclusion Zone definition). Monitoring of pressure and temperature shall be made from a remote location.

If no leaks are indicated at the test pressure, the pressure within the test assembly shall be slowly released, down to the atmospheric pressure.

Pressure shall be released by means of a suitable valve, i.e. pressure release shall not be achieved by loosening of flange bolts or plugs or via a line ball valve or gate valve.

Care shall be taken to avoid metal temperatures falling below minimum metal temperature (or 0°C), particularly near the vent connection during depressurizing.

The metal temperature during testing shall be at least 17°C (30°F) above the minimum design metal temperature (Ref. ASME VIII Div 1) in order to minimize the risk of brittle fracture.

Repairs

This document is the property of SPCC who will safeguard its rights according to the civil and penal provisions of the Law.

If any leaks are found in a welded joint (any bubbles observed as a result of seepage shall be considered as rejected), they shall be repaired (after depressurization) using an approved weld repair procedure and proved acceptable by radiographic testing prior to repeating the pneumatic test.

Any leaks at flanged joints shall be investigated prior to remedial action. Care shall be taken not to apply excessive torque to bolting to achieve a leak-tight seal.

Following repair of any leaks, the full pneumatic test procedure of Section 6 shall be followed in repeating the test.

Certification

Following successful test, the “Subcontractor execution responsible /Contractor Discipline Superintendent” shall provide a test certificate for each test assembly. The appropriate permanent pressure / temperature recordings shall be attached to each test certificate. Any previous leaks and their causes shall be noted upon the final test certificate.

The “Subcontractor execution responsible /Contractor Discipline Superintendent” shall report any undue flexing, distortion or banging which may have occurred during testing.

A dedicated training for pneumatic test will be held to all personnel involved. Communication during the test shall be guaranteed using radio on agreed channel.

This document is the property of SPCC who will safeguard its rights according to the civil and penal provisions of the Law.

PTTLNG Nong Fab LNG Receiving Terminal Project

SHE PROCEDURES
(SAFE TRANSPORTATION)

Doc. Class Z

This document is the property of SPCC who will safeguard its rights according to the civil and penal provisions of the Law.

Revision list:

Rev. Nr	Modifications:
R1	First Issue

TABLE OF CONTENTS

1. PURPOSE 289
2. REFERENCE 289
3. RESPONSIBILITIES 289
4. INTRODUCTION 292
5. DESCRIPTION OF SAFETY PRECAUTIONS 293
5.1 LAYOUT 293
5.2 PEDESTRIAN ROUTES 293
5.3 VEHICLE ROUTES 294
5.4 ROAD MARKING AND SIGNAGE 294
5.5 PERSONNEL LOADING/UNLOADING 295
5.6 PARKING 298
5.7 EMERGENCY RESPONSE 298

This document is the property of SPCC who will safeguard its rights according to the civil and penal provisions of the Law.

1. PURPOSE

The purpose of this procedure is to outline the requirements for Road and Transport Safety during the Project.The procedure applies to all operations utilising road or off road transportation, applicable to all Contractor personnel and Subcontractors working on the Project

2. REFERENCE

- STD-COR-HSE-016

3. RESPONSIBILITIES

Project Manager -Construction is responsible for the overall implementation of the Traffic Plan.

The Construction Manager shall put in place suitable arrangements to ensure the potential risk is minimised to both pedestrians and vehicles.

FSHEM reports to the PTTLNG/PM-C and is responsible for reviewing this document for compliance with Contractor and COMPANY requirements and monitoring the execution of the Traffic Plan for compliance.

The FSHEM will:

- ensure that site conditions and traffic control meet the requirements outlined in this plan and that any deficiencies are reported to the PTTLNG/ PM-C;
- perform surveys/audits on a monthly basis to assess compliance with this Traffic Plan;
- ensure that all damages, incidents, near misses or potential incidents involving vehicles and equipment are reported, investigated and that preventative measures are communicated and implemented;
- conducting induction course for drivers and pedestrians (records of attendance and covered topics will be recorded and kept by the FSHEM).

The Transport Coordinator will:

- ensure that site conditions and traffic control meet the requirements outlined in this plan and that any deficiencies are reported to the PM-C;
- perform surveys/audits on a monthly basis to assess compliance with this Traffic Plan;

This document is the property of SPCC who will safeguard its rights according to the civil and penal provisions of the Law.

- ensure that all subcontractors are advised of the designated departure / arrival times for the transportation of personnel between accommodation camp and the Work Site;
- make sure that fire extinguishers and first aid kits are fitted in cars, trucks etc. and maintained in good conditions;
- provide oversight of subcontractors transportation plans to ensure that the required safety equipment standards are applied on all subcontractors vehicles operating on the project;
- be responsible for determining the urgency and priority of all journeys, and for coordinating journeys that are simultaneously required.
- The TC is responsible for determining personnel requirements, vehicle requirements and equipment requirements for all extended rescue journeys. He is to ensure the coordination and acquisition of equipment and supplies affect the extended rescue journey.
- The TC is responsible for the scheduling of normal (day to day) travel, and will inform all extended distance travelers of the need for implementing Safe Transportation procedure
- The TC is responsible for initiating emergency response action.

SUBCONTRACTORS

All subcontractors shall conduct their activities in line with this document.

Subcontractors are responsible for arranging transport for their personnel to and from accommodation camp to work site.

Subcontractors will employ strict controls for safely transporting their personnel from accommodation camp to work site.

Subcontractors are responsible for the safe movement of equipment, material, and pedestrian traffic within the Construction Works area in compliance with the plan.

CONTRACTOR's subcontractors, including their sub-subcontractors, are wholly responsible for ensuring that the rules and arrangements in place on the site are being followed and adhered to.

They will specifically:

- assign responsibility within their organisation for the control of vehicles and pedestrians at all times, while employed on the Project;
- monitor and maintain an audit process of the arrangements in place for controlling compliance with the Traffic Plan.

SUPERVISOR AND FOREMAN

This document is the property of SPCC who will safeguard its rights according to the civil and penal provisions of the Law.

It is the responsibility of the Supervisors and Foremans to enforce and respect the Traffic Plan, rules and arrangements to control transportation on the project including subcontractors.

DRIVERS

A driver is responsible for safely operating the vehicle assigned to him at all times.

Drivers will comply with the following requirements:

- possess valid, current license for the required location. be physically capable of performing the job function;
- ensure that a daily check is performed on his vehicle at the beginning of each shift (a checklist shall be prepared by the FSHEM for this purpose);
- report any defect, abnormality or excessive wear and tear immediately to his supervisor, who shall book the vehicle into the maintenance workshop for rectification;
- each vehicle must be fitted with a suitable and operational fire extinguisher (2 kg chemical dry powder type is considered suitable). In addition, a fully equipped first aid kit, and 2 hazard warning triangles for use in a breakdown situation must be available on each vehicle;
- wear a seat belt and ensure that all passengers wear seat belts;
- possess suitable and sufficient PPE for offloading the vehicle on site, including tie-off lanyards if working at height on the back of the vehicle;
- follow defensive driving principles;
- never drive under the influence of alcohol or drugs;
- do not smoke;
- report all damages, accidents, near misses and potential incidents, and any vehicle damage or defects to his supervisor;
- Is expected to reduce his vehicle's speed under hazardous weather or road conditions;
- not overload the vehicle with passengers or material;
- not carry contraband or other prohibited items;
- follow all road signs and driving instructions (must not exceed the posted speed limit);
- do not use mobile phone while driving.

All Professional drivers shall:

- hold a valid driving license appropriate to the type of vehicle being driven;
- be over 21 years of age and have at least one year's relevant experience of driving light vehicles; for drivers of all other vehicles a minimum of two year's relevant experience is required;
- undergo medical checks to ensure their continuing fitness to drive professionally.

All Occasional drivers are required to have a valid driving license, obey the Traffic Rules and to comply with the requirements of this document.

This document is the property of SPCC who will safeguard its rights according to the civil and penal provisions of the Law.

The driver is responsible for transporting materials properly and ensuring that a load does not exceed the manufactures design load capacity.

All loads must be properly secured and tied down. Materials should not extend over the sides of the truck. Loads extending beyond the front or rear shall be marked with a red flag.

Drivers shall not transport unauthorized persons in CONTRACTOR and/or subcontractor vehicles. Drivers have full authority to refuse to transport any passenger who refuses to use seat belts.

All drivers shall be familiar with what the CONTRACTOR considers unsafe driving practices, and avoid them at all times.

In the event of vehicle breakdown or accident the driver shall:

- ensure the vehicle does not present a hazard to other road users;
- place a hazard warning triangle 100 metres from the vehicle in the direction of oncoming traffic;
- notify his supervisor of the breakdown, location of the vehicle and that assistance is required;
- stay clear of the vehicle.

All drivers and mobile plant operators will be subjected to eye sight examination prior their commencement of work on site and every six months after that.

Records of eye test will be maintained and shall be provided to CONTRACTOR and COMPANY on request.

PASSENGER

- ride only in authorized vehicles;
- wear seat belts and other required PPE;
- ride only in the vehicle's provided seats (standing will not be allowed);
- not interfere with the driver or distract the driver's attention except if necessary to bring to the driver's attention the requirement for him to wear the seat belt (in the case of seat belt ensure the driver safely stops the vehicle before deploying his belt) or abide by the speed limits;
- know and obey emergency procedures;

4. INTRODUCTION

These guidelines are applicable to the transport of materials and passengers. They provide information for identifying and classifying the material to be transported and

This document is the property of SPCC who will safeguard its rights according to the civil and penal provisions of the Law.

for its safe packaging and transport. The guidelines stress the importance of

Developing a working relationship between the groups involved – the sender,the carrier and the receiver – in order to provide for the safe and expeditious transport of this material.

5. DESCRIPTION OF SAFETY PRECAUTIONS

5.1 LAYOUT

A safe site-layout will be providing on site before work commences by Contractor for areas under own responsibility, based on an assessment of the following:

- pedestrian and vehicle routes;
- personnel loading/unloading;
- laydown areas
- traffic control;
- site entrance / exit;
- storage;
- parking.

Subcontractors shall delivery to Contractor all site-layout for areas under own responsibility.

A road access route map shall be issued by Contractor and Subcontractors and delivered to each driver to clearly define traffic routes on site; map shall be in the cab of all transports.

5.2 PEDESTRIAN ROUTES

Pedestrian routes will be established on site to provide safe access to and from parking, laydown and work areas for employees.

Pedestrian-only areas, from which vehicles are completely excluded, will be established where necessary and to the extent reasonably possible.

These pedestrian routes should:

- be located a reasonable distance away from areas of vehicle activity;
- be clearly separated from vehicle routes with fencing, temporary barricades, or other suitable means;
- be wide enough to safely accommodate the volume of employees likely to use them during peak times;

This document is the property of SPCC who will safeguard its rights according to the civil and penal provisions of the Law.

- be free from obstructions and have safe and even footing;
- be clearly marked and clearly signed;
- include traffic control measures where a large number of employees cross busy vehicle routes, such as designated crossing points, signal person / banksman to control vehicles, light signals, or a crossing guard with appropriate attire.

5.3 VEHICLE ROUTES

All vehicle routes will be designed to avoid pedestrian routes to the extent reasonably possible.

Primary vehicle routes will be set up to handle the most common vehicle movements, such as deliveries and the movement of heavy equipment to and from the work areas/site.

Vehicle-only areas / routes will also be established where space is limited or traffic is heavy.

Control measures will be utilized where risks are high due to the volume and types of vehicles operating in a specific area / route.

Vehicle routes will:

- provide separation from pedestrians;
- minimize the need for reversing operations through use of one-way systems and turning points;
- have firm surfaces, adequate drainage, and appropriate profiles to allow for safe movement;
- have low gradients without tight bends where practical;
- be clearly signed with hazard warnings to pedestrians, drivers and reminders of safe work practices, and directions to secure routes – including cross road and junction priority signs, etc.;
- indicate speed limits and speed control measures specific to site conditions.

Where vehicle routes cannot avoid proximity to hazardous conditions and construction vehicle operations, measures should be taken to reduce and control the risks.

Heavy equipment transportation into the PROJECT SITE shall be avoided during the rush hours (from 06.00 - 09.00hrs and 17.00-19.00hrs) as to comply with the EIA requirements.

5.4 ROAD MARKING AND SIGNAGE

Along all the roads especially on that used as connection between camps and construction areas, but generally everywhere road signs and any safety option shall be placed to guarantee as a minimum:

This document is the property of SPCC who will safeguard its rights according to the civil and penal provisions of the Law.

- Right of way: placing stop sign, priority sign
- Pedestrian safety: placing humps
- Vehicle Curve safety : placing humps before the curve
- Parking safety: placing prohibition sign where not allowed
- Delimitation of main roads: shall be defined by PM-C and FSHEM where shall be placed temporary barriers

5.5 PERSONNEL LOADING/UNLOADING

The following guidelines shall be applied to all locations where personnel will be loaded or unloaded, including accommodation camps.

Personnel loading and unloading areas will be clearly designated / numbered on the plan and the actual location at the various sites.

Loading and unloading areas should comprise designated areas of clear hard standing, sufficient for the number of buses and personnel designated to the area.

The most forward point of each area shall have a manually operated traffic barrier.

It is anticipated that at peak manning levels more loading and unloading areas will be required for the Contractor and subcontractors working areas.

All buses shall be uniquely numbered and all personnel will be allocated to a specific bus number, a simple disc or tally will be issued to personnel indicating their bus number.

PERSONNEL LOADING

Buses shall be parked , in sequence “nose to tail “in the loading areas at least 10 minutes before the designated depature time.

Once the most forward bus, Leading Bus, in is position the manually operated traffic barrier shall be lowered into position by the Bus Marshall.

Each bus will have a Bus Marshall appointed who will be responsible for conducting an ID check, headcount and ensure that all personnel have engaged their seat belts prior to the bus departing.

All Bus Marshals shall be in the loading areas at least 10 minutes before the designated departure time.

When each bus is fully loaded each Bus Marshall will advise the Leading Bus Marshall.

When all buses are fully loaded the Leading Bus Marshall will raise the traffic barrier to allow the group of buses to depart.

This document is the property of SPCC who will safeguard its rights according to the civil and penal provisions of the Law.

Depending on the project manning levels and the number of loading areas in use there will be a series of loading areas in one line.

In this case the Leading Bus Marshall may not raise the traffic barrier until such time that bus group immediately in front of his group has departed.

PERSONAL UNLOADING

Buses shall arrive in the unloading areas, in sequence “nose to tail”.

Once the most forward bus, Leading Bus, is in position the traffic barrier shall be lowered into position by the Bus Marshall.

When each bus is fully unloaded each Bus Marshall will advise the Leading Bus Marshall.

When all buses are fully unloaded the Leading Bus Marshall will raise the traffic barrier to allow the group of buses to depart to the designated bus parking area if required.

Depending on the project manning levels and the number of unloading areas in use there will be a series of unloading areas in one line.

In this case the Leading Bus Marshall may not raise the traffic barrier until such time that bus group immediately in front of his group has departed.

All bus drivers shall engage the handbrake and switch off the engine as soon as they in position at a loading or unloading area.

Engines may only be restarted once the traffic barrier has been raised to allow buses to depart.

No construction material or tool boxes to be transported on the bus.

Under no circumstances are buses allowed to overtake each other, they must maintain their designated sequence from point of loading to point of unloading.

In the event of a vehicle breakdown appropriate diversions and warning signs shall be utilized.

Bus routes shall be planned such that buses do not make multiple stops on their journeys, i.e. a journey consists of travelling between from a single point of loading to single point of unloading.

Each Leading Bus Marshall will be issued with a radio in order that he may contact the subcontractor SHE Manager in the event of a problem within his group.

Prior to the use of any substance classified as hazardous all precautions including:

This document is the property of SPCC who will safeguard its rights according to the civil and penal provisions of the Law.

- First aid equipment;
- Fire fighting equipment;
- Protective clothing;
- Absorbent sand or other material necessary to contain spillages;
- Changing rooms or other welfare facility;
- Minimization of the amount to be used (minimum required).
- Ensure material data sheet available for all hazardous materials on the site

Application of this procedure for carrying out checklist shall be the responsibility of the Contractor Supervisor and safety or subcontractor organization as required.

Advice may be sought from the Contractor Field HSE Manager which maintain a 'Toxic Materials Manual' which may be used as a reference.

Subcontractors and vendors who introduce a material on to the project shall provide:

- Name and address of supplier;
- Trade name or commonly known name;
- Chemical constituents;
- Use & purpose;
- Occupational exposure limits/threshold limit values;
- Chemical reactions and substances that are incompatible;
- Fire, toxic, corrosive and environmental hazards;
- Fire extinguishing mediums;
- Waste management and disposal;
- Emergency actions;
- Personal protective clothing;
- First aid and medical treatment;
- Storage, Package and labelling.

Details of the delivery will be provided to the Contractor Field HSE Manager who shall co-ordinate with the Contractor Task Supervisor/Subcontractor concerned to initiate the checklist .

This document is the property of SPCC who will safeguard its rights according to the civil and penal provisions of the Law.

5.6 PARKING

Parking will be addressed during site layout to meet the following requirements:

- general parking will be situated away from the operation of heavy equipment and construction activity;
- parking locations will provide easy access to the site and safe passage for vehicles and pedestrians travelling to and from the site parking areas;
- designated parking areas will be established at suitable locations adjacent to construction activity and congested work areas;

5.7 EMERGENCY RESPONSE

Subcontractors shall issue a detailed Emergency Contact Number List to all Drivers this shall detail where assistance may be reached when needed, during personnel movements, loading, unloading and transporting of construction materials (i.e. Locations and telephone numbers of Contractor Health Coordinator, Hospitals, Clinics, Police Stations, Civil Defence and Fire Stations).

All Drivers shall be briefed and trained to vehicle use in to action to taken driving various emergency situation such as but not limited to:

- Mechanical breakdown;
- Road accident;
- Wilful damage to vehicle;
- Police intervention;
- Kidnapping.

Where the Subcontractors has road transport requirements that include a need for personnel to travel long distances, the Journey Management Plan shall include arrangements for triggering emergency response from resources sufficiently close to the location of the incident to be able to provide adequate medical assistance.

The emergency response arrangements shall include:

Definition of the method of identifying a need for response (e.g. emergency communications, overdue arrival etc.), and how different methods are to be applied to different types of journey;

- Arrangement for providing appropriate breakdown and medical assistance at an incident site;
- Arrangements for rescue of stranded personnel and vehicle recovery;
- Arrangements for obtaining appropriate medical treatment for injured personnel;
- Arrangements for recovering loads fallen from vehicles in an accident;
- Arrangements for handling any spillage that may have an environmental effect.
- Driver Group Leader must ensure the list of his personnel is updated.

This document is the property of SPCC who will safeguard its rights according to the civil and penal provisions of the Law.

EMERGENCY PLANS

Emergency plans must be based on events and situations identified in land transport risk assessments and will typically include provisions for:

- Driver lost in hostile environment.
- Vehicle stolen.
- Vehicle off the road.
- Overturned vehicle.
- Vehicle fire/explosion in all likely situations (e.g. urban, desert).
- Collisions involving fatality including multiple fatalities.
- Loss of load or cargo.
- Trailer incidents, such as trailer detachment.
- Leaking hazardous cargo or hazardous chemical incident.
- Cargo or load fire, tyre fire.
- Pollution (water, land or air) incident.

Responses must be documented for each event where a significant risk has been assessed.

The roles and responsibilities of all individuals who deal with emergencies must be documented. This includes such people as:

- Company employees.
- Contractors.
- Vehicle recovery specialists.

Subcontractors must respect Contractor procedures for dealing with medical emergencies resulting from traffic incidents. Incidents involving injury to people usually occur away from the depot or operating location. The provision of medical response to remote locations must be included in procedures where appropriate.

Procedures should be established to test emergency response plans by scenario drills and other suitable means at appropriate intervals. The emergency plans must be revised and updated as necessary, in the light of experience gained through testing and practice.

Procedures must also be in place for the periodic assessment of emergency equipment needs and the maintenance of such equipment, so that it is ready for use when required.

Every vehicle must carry instructions, in English and local language, so that emergency services or other third parties can alert the vehicle's owner or operator in an emergency at any time, during the day or night. Where it is not practicable to have

This document is the property of SPCC who will safeguard its rights according to the civil and penal provisions of the Law.

a single emergency call point, multiple, contact numbers must be provided. These should be clearly differentiated from one another, e.g. by providing a map showing the area in which each number applies.

Effective communication is vital in dealing with an off-site emergency such as a traffic incident. The communications system, or systems, must be effective in all areas in which the vehicle is to be travelling. Where vehicles are operating in remote areas, a Global Satellite Positioning (GPS) system must be fitted/available.

MINIMUM VEHICLE SAFETY EQUIPMENT STANDARDS

Appropriate rear-view mirrors (internal and external – both sides)

- Lights (head and rear, stop, turn signal, and emergency warning)
- Reflective warning triangle (portable emergency warning)
- Signage (bus and other similar vehicles only):

    1. maximum number of passengers;
    2. maximum allowable speeds – on site – on public roads – on open highway.

- Reflective Strips
- Daytime running lights
- Quality of sunglasses
- Reversing alarms
- Emergency Exit (bus and other similar vehicles only)
- Fire extinguishers
- Drinking water supply
- First aid kits
- Reflective jackets
- Danger triangles for road side emergency warning
- Torchlight
- Fog lights
- Vehicles (bus, vans, etc.), which transport multiple individuals, shall have seat belts installed and maintained in serviceable condition e.g. Sedans, Pickups, SUV's and Minivans have seat belts for each passenger, passenger buses shall have seat belts for all personnel
- Desert survival kit (for desert driving)
- Communication device for use in emergencies and/or to report accidents/incidents

12 MARINE TRANSPORTATION

All boats shall be equipped with handrails and shall be duly registered and carry valid certificates.

Every marine craft shall carry the appropriate safety equipment listed in the survey certificate and these shall be readily accessible and in good condition; the crew shall be trained in their use.

All craft shall carry an adequate number of life jackets to cover the maximum

This document is the property of SPCC who will safeguard its rights according to the civil and penal provisions of the Law.

authorized number of passengers plus crew.
The Quartermaster shall ensure that boats berth properly in areas designated for them and are secured before passengers and crew are allowed to embark or disembark, using a well established, safe access.

Every craft shall be navigated in accordance with safe speed regulations so as to prevent obstructions, damage or danger to any other vessel or person.

Craft shall be used only for authorized work activities; night work shall have prior approval.

Passengers and crew shall wear life jackets at all times when they are aboard water-craft.

All life saving equipment shall be in good condition, and free from defects that are likely to reduce their effectiveness in any way.

Life Jackets aids shall be kept readily accessible in case of emergency (preferably one under each seat).

Signs denoting the location of Life Jackets shall be clearly visible.

Fire extinguisher equipment shall be sufficient to extinguish all types of fire likely to be encountered on the craft; they shall be readily accessible, free from obstruction and their locations clearly marked by adequate signs, inspected on a monthly basis by a competent person, and marked accordingly.

All mechanical, electrical and safety systems shall be maintained in accordance with the manufacturers instructions, and a log kept of all maintenance and repair activities.

Emergency flares shall be stored in a safe and accessible compartment of the craft, to be used to attract attention and assistance should the craft suffer a mechanical failure or otherwise be endangered.

The one person in charge of the craft shall be a competent and authorized seafarer to be employed in the position of captain.

The captain shall be qualified in the use of all the above-noted equipment.

Every marine craft shall be equipped with a communications system to facilitate communications.

This document is the property of SPCC who will safeguard its rights according to the civil and penal provisions of the Law.

PTTLNG Nong Fab LNG Receiving Terminal Project

SHE PROCEDURES
(SITE PREPARATION)

Doc. Class Z

This document is the property of SPCC who will safeguard its rights according to the civil and penal provisions of the Law.

Revision list:

Rev. Nr	Modifications:
R1	First Issue
R2	Revised per client comment

TABLE OF CONTENTS

1 PURPOSE 303

2 REFERENCE 303

3 RESPONSIBILITIES 303

4 INTRODUCTION 304

5 INSTRUCTIONS 304

5.1 Personnel induction and control 304

5.2 Preparation 304

5.3 Execution of the Work 304

5.4 Backfill and Compaction 305

5.5 General Considerations and Safety Aspects 305

This document is the property of SPCC who will safeguard its rights according to the civil and penal provisions of the Law.

1 PURPOSE

The purpose of this procedure is to define the safe practices and actions required to control the Site Preparation activities (including Earth moving). This procedure applies to all work involving the movement / removal of earth for the purpose of levelling, compacting, boring and creating any graded area required as a working place for civil activities.

2 REFERENCE

Contractor will ensure that all Site Preparation work shall be carried out in compliance with all applicable Local Government safety and environmental regulations and all Client HSE Guidelines/Procedures and other related rules and regulations at all time.

3 RESPONSIBILITIES

- The Contractor Civil Work Superintendent

The Contractor Civil Work Superintendent in charge of the work shall carry out the following activities:

- prior to any levelling, boring, grading and backfilling works began, a survey of the area shall be carried out to establish the presence of any underground utilities;
- identify the presence of any overhead lines and other obstructions;
- establish ground conditions, e.g. the type of ground involved, clay, sand etc., compaction qualities and water table;
- identify the need for any permits that are required in the area and arrange for them;
- brief the Subcontractor carrying out the work of any adjacent operations that may impact on the work, the presence of overhead and underground utilities;
- coordinates Subcontractors, in order to avoid works interferences;
- verify the fulfilment by the Subcontractors of all the applicable safety rules.

- Subcontractors

Subcontractors shall be responsible for the following:

- briefing personnel doing the work following the safe working practices required;
- application of any work permits that are provided;
- provision of equipment to carrying out the work safely that has been maintained and certified for use on the project;
- provision of adequate barriers, flashing lights and signs for the work;

This document is the property of SPCC who will safeguard its rights according to the civil and penal provisions of the Law.

- programme the work to ensure that any trenches that go across roads are done so in a manner that maintains access;
- notify the Civil Work Superintendent of any unmarked utilities found;
- provide a fully equipped First-aid Box for each working crew.

- Subcontractor SHE Supervisor

  - Shall monitor the implementation of this procedure
  - Shall verify the SHE requirements during site preparation.

4 INTRODUCTION

Preparing a site for construction is the first and important step in the process of construction activity. As part of this process, the contractor must take into account the potential hazards that can be encountered on site; protection of machinery and equipment; control of ignition sources; storage of flammable and combustible materials; housekeeping; staff training; and end-of-shift checks.

5 INSTRUCTIONS

5.1 PERSONNEL INDUCTION AND CONTROL

Everybody who enters on site shall be inducted before beginning to work. Control of people operating on plant and drivers is mandatory to ensure that only authorised people who have been included on site rules are operating plant and machinery.

5.2 PREPARATION

Before any levelling work is carried out the following procedures and actions will be carried out:

- the ground conditions mentioned above will be determined by predetermined soil analysis, boreholes or trial pits;
- hand digging requirements will be established for exposing existing utilities if any;
- readiness of the Lay-down area in order to dispose the earth;
- implementation of any traffic reducing measure needed to avoid roads congestion from Dumpers during the earth moving activity and Water Tankers during the compaction activity.

5.3 EXECUTION OF THE WORK

During the process of earth removal the following safe working procedures will be followed:

- personnel will be kept clear of machinery whilst it is in operation, minimum distance of 5 metres;
- maximum speed allowed on site during work is of 20 km/h

This document is the property of SPCC who will safeguard its rights according to the civil and penal provisions of the Law.

- barriers and signs will be erected to keep unauthorised personnel clear;
- barriers (e.g. jersey) to protect vulnerable structures such as excavations and scaffolds shall be erected;
- trucks used for the removal of soil will be controlled and sited by a banksman;
- personnel engaged in hand digging operations will be briefed on the actions to be taken when uncovering marker tiles, cables, pipework etc.;
- soil will be stacked in the dedicated Lay-down area and compacted.

5.4 BACKFILL AND COMPACTION

Backfill and Compaction operations shall be carried out in accordance with the following guidelines:

- backstops will be provided for vehicles dumping material to prevent them over running the edge;
- consideration will be given to the specification for compaction qualities, need for tile markers and tiles and other protection measures necessary for the protection of equipment;
- redundant soil not backfilled will be removed to an area identified in advance;
- a safe system of work will be identified and implemented for the removal of timber supports, steel sheeting and piles (consideration will include provision of lifting appliances suitable to take the load of embedded sheet piles without damage).

5.5 GENERAL CONSIDERATIONS AND SAFETY ASPECTS

The following general considerations shall be applied for the purpose of this procedure:

- dewatering equipment shall be sited in locations that avoid creating trip hazards;
- daily monitoring of the soil consistency before any equipment and/or machinery enters the site in order to avoid sinking;
- following any sudden rainfalls or other environmental conditions that may affect the integrity of the excavation;
- subcontractors shall keep a register of all equipment and/or machinery used and the record of their periodical maintenance (these records will be kept in the office of the Subcontractor and ready to any inspection by the Contractor);
- adequate lighting will be provided for any work scheduled during the hours of darkness (consideration shall include glare factors, working in shadow and sufficient illumination to cover the area worked);
- safe working system at all time and work coordination in order to avoid any interference between Subcontractors;
- use of Personal Protective Equipment (Hard Hat, Safety goggles, Coverall, Safety shoes, Gloves, Ear Protectors and etc.);

This document is the property of SPCC who will safeguard its rights according to the civil and penal provisions of the Law.

- eliminate any possible Fire Hazards (e.g. carrying fuels in approved tank, engine shall be in shut-down during motors/equipment refuelling, etc.); each equipment and/or machinery shall be equipped with Fire Extinguisher;
- holes done shell be fenced off / signalled (with still rods and warning tape);
- during the Drilling machine transfer and before its positioning, soil stability shall be verified in advance;
- traffic Safety shall be implemented in/out Site areas with dedicated signboards and in respect of all traffic regulations (Government and Internal);
- safety induction, tool-box and meeting shall be held to all personnel involved in the project on weekly basis or whenever required.

This document is the property of SPCC who will safeguard its rights according to the civil and penal provisions of the Law.

PTTLNG Nong Fab LNG Receiving Terminal Project

SHE PROCEDURES (WARNING SIGNS)

Doc. Class Z

This document is the property of SPCC who will safeguard its rights according to the civil and penal provisions of the Law.

Revision list:

Rev. Nr	Modifications:
R1	First Issue
R2	Revised per client comment

TABLE OF CONTENTS

1 PURPOSE 309

2 REFEFRENCE 309

3 RESPONSIBILITIES 309

4 INTRODUCTION 309

5 INSTRUCTIONS 310

5.1 Specifications 310

5.2 Site Perimeter and Access Point Signs 311

5.3 Attachments 311

6 TELEPHONE FOR FIRE FIGHTING INTERVENTIONS 316

APPENDIX 1 – EQUIPMENT CHECK LIST 317

APPENDIX 2 – TEMPORARY ELECTRICS TAG 318

This document is the property of SPCC who will safeguard its rights according to the civil and penal provisions of the Law.

1 PURPOSE

The purpose of this procedure is to outline the requirements for the effective use of safety signs. This procedure applies to all activities during the construction phase.

2 REFEFRENCE

- International regulation and corporate standards.

3 RESPONSIBILITIES

The Contractor Field SHE Manager will be responsible for the following:

- ensuring that Contractor Supervision and Subcontractor management are familiar with this procedure;
- that signs and barriers are ordered in accordance with this procedure;
- monitoring site conditions to ensure that signs and barriers are being erected as appropriate to the conditions.

Subcontractor Supervisors and Superintendents will be responsible for:

- identifying and ordering sufficient signs and barriers to control their areas of work;
- ensuring that signs and barriers are erected in accordance with this procedures;
- provision of instruction as required;
- ensuring that adequate barriers are provided around areas where hazards may exist.

4 INTRODUCTION

The signs depicted in this procedure can be grouped as follows:

- Mandatory;
- Prohibition;
- Warning;
- Safe conditions;
- Fire.

This document is the property of SPCC who will safeguard its rights according to the civil and penal provisions of the Law.

5 INSTRUCTIONS

These instructions shall apply equally to office, workshop, site or desert locations used by personnel or their contractors.

All emergency exits passageways, fire doors first aid stations, eye wash stations emergency muster point shall be highlighted with safety condition signs.

Warning signs shall be erected and displayed for fire hazards, electrical equipment, openings, overhead working, noisy areas, and other hazards.

Mandatory signs shall be provided for enforcing the use of personal protective clothing and equipment and providing specific instructions appropriate to the task or condition.

Prohibition signs will be displayed for restricting access or entry, no smoking areas, no parking, and any other unauthorised acts.

Fire signs shall be provided at areas where fire equipment has been sited e.g. fire extinguishers, fire Points, fire blankets etc.

Barriers and warning tape will be provided as appropriate, only fixed and solid barriers will be used for edge protection on excavations, floor openings and penetrations.

5.1 SPECIFICATIONS

The following specifications shall be followed when ordering signs.

- Prohibition Signs:
  Background colour shall be white with black symbol, centrally placed and red circular band and crossbar.
  A minimum of 35% of the sign shall be red.

- Mandatory:
  Background colour shall be blue, with the symbol or text centrally placed.
  At least 50% of the sign shall be in blue.

- Warning:
  Background colour shall be yellow with a triangular warning symbol edged with a black band.
  The text or symbol will be in black and centrally located.

- Safe Condition/rescue:
  Background colour shall be green with white symbol or text.
  The shape of the sign shall be square or oblong and green shall cover at least 50% of the sign.

- Firefighting Sign:
  Background colour shall be red with white symbol or text.

This document is the property of SPCC who will safeguard its rights according to the civil and penal provisions of the Law.

The shape of the sign shall be square or oblong.

- Barriers:

  Barrier tape shall be suitable for external use and maybe either:

fluorescent, orange or other high visibility colour (for traffic control);

red and white or yellow and red for general warning & Hazard warning pennants.

Fixed barriers either constructed from scaffolding or timber shall be used for instances such as excavations below 1.2 metres in depth or floor openings/penetrations where persons may fall from.

5.2 SITE PERIMETER AND ACCESS POINT SIGNS

Where practicable fencing and signs will be erected to contain construction areas with the following signs erected:

- authorised personnel only;
- hard hats to be worn;
- eye protection required;
- safety footwear;
- drivers report to (...).

5.3 ATTACHMENTS

Main Prohibition signs



PROHIBITION PEDESTRIANS TRANSIT



PROHIBITION FORK-LIFT TRANSIT





This document is the property of SPCC who will safeguard its rights according to the civil and penal provisions of the Law.

PROHIBITION FLAMES IGNITION



NO SMOKING



PROHIBITION TO ENTRY FOR NOT AUTHORIZED PERSONNEL

ROAD CIRCULATION PROHIBITED IN BOTH TWO WAYS





PROHIBITED TO ENTER IN THE STREET

PROHIBITION PARKING

This document is the property of SPCC who will safeguard its rights according to the civil and penal provisions of the Law.

Main Mandatory signs



FILTER MASK MANDATORY



SAFETY GLASSES MANDATORY



EAR PROTECTION MANDATORY



SAFETY GLOVES MANDATORY



SAFETY SHIELD MANDATORY



SAFETY HELMET MANDATORY



SAFETY COVERALL MANDATORY



SAFETY SHOES MANDATORY

This document is the property of SPCC who will safeguard its rights according to the civil and penal provisions of the Law.

Main warning signs



DANGEROUS ELECTRICAL VOLTAGE



EXPLOSIVE MATERIAL



FLAMMABLE MATERIAL



GENERIC DANGER



IONIZING RADIATION DANGER DANGER



BIOLOGICAL DANGER



POISONING SUBSTANCES



HARMFUL SUBSTANCES OR IRRITANTS



CORROSIVE SUBSTANCES

This document is the property of SPCC who will safeguard its rights according to the civil and penal provisions of the Law.

Main rescue signs



EMERGENCY EXIT



PATH / EMERGENCY EXIT

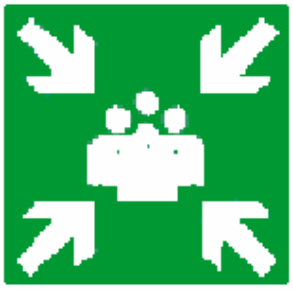

COLLECTING POINT



DIRECTION TO BE FOLLOWED



DIRECTION TO BE FOLLOWED



FIST AID



EMERGENCY SHOWER-EYES WASH



EMERGENCY SHOWER

This document is the property of SPCC who will safeguard its rights according to the civil and penal provisions of the Law.

Main fire fighting signs



HYDRANT



FIRE EXTINGUISHER



FIRE ALARM BUTTON



6 TELEPHONE FOR FIRE FIGHTING INTERVENTIONS

This document is the property of SPCC who will safeguard its rights according to the civil and penal provisions of the Law.

APPENDIX 1 – EQUIPMENT CHECK LIST

AREA / FACILITY CHECKED : _____ COMPANY : _____

DATE : _____

POWER GENERATION	A	UA	SAFETY DEVICES	A	UA
Condition			ELCB'S / RCD'S		
Housekeeping			Isolation Points		
Outlets			Panels Locked		
CABLES			**ELECTRICAL HAND TOOLS**		
Connections			Condition		
Terminations			Double Insulated		
Condition			Sockets and Fittings		
Capacity & Ratings					
Routings / Cable Management					
EARTHING			**FITTINGS**		
Distribution Boards			No exposed cables / wires		
Cabins/Offices			Condition		
Transformers / Generators			Non Domestic		

A	Acceptable
UA	Unacceptable

Comments :					

This document is the property of SPCC who will safeguard its rights according to the civil and penal provisions of the Law.

APPENDIX 2 – TEMPORARY ELECTRICS TAG

TEMPORARY ELECTRICS TAG

THE EQUIPMENT DETAILED BELOW HAS BEEN CHECKED AND IS CERTIFIED SAFE FOR USE

_____

_____

_____

Signed : _____ Date : _____

Contractor (Name) _____

Any interference with this equipment will negate this tag.

Any alternations required must be notified in advance to the undersigned.

This document is the property of SPCC who will safeguard its rights according to the civil and penal provisions of the Law.

PTTLNG Nong Fab LNG Receiving Terminal Project

SHE PROCEDURES (WELDING OPERATIONS)

Doc. Class Z

This document is the property of SPCC who will safeguard its rights according to the civil and penal provisions of the Law.

Revision list:

Rev. Nr	Modifications:
R1	First Issue
R2	Revised per client comment

TABLE OF CONTENTS

1 PURPOSE 321

2 REFERENCE 321

3 RESPONSIBILITIES 321

4 INTRODUCTION 322

5 DESCRIPTION OF SAFETY INSTRUCTION 323

This document is the property of SPCC who will safeguard its rights according to the civil and penal provisions of the Law.

1 PURPOSE

The purpose of this procedure is to outline the requirements for managing and controlling operations involving the use of welding and burning equipment.

The main hazards likely to be encountered during welding and burning processes can be identified as follows:

- high temperatures causing risk of fire and burns;
- fumes emitted from the process likely to cause injury to health;
- radiation causing 'arc eye' and burns;
- oxygen deficiency or enrichment, particularly within an enclosed space;
- electric shock;
- explosions during the welding and cutting of drums, tanks or vessels which have contained flammable materials.

Any of the above can lead to lost time injuries, occupational illnesses and in some cases fatal injury, and it is therefore imperative to ensure that arrangements are in place to control those activities and operations, covered by this procedure. This procedure applies to all activities conducted by the consortium and their subcontractors involving the use of welding plant and fuel/oxygen gas cylinders.

Nevertheless it's important to remind that it's to be preferred to work in fabshop than site welding activities.

2 REFERENCE

- STD-COR-HSE-017-E
- STD-COR-WELD-002-E
- STD-COR-WELD-009-E

3 RESPONSIBILITIES

Subcontractor Construction Manager/Superintendents

That suitable arrangements are in place to ensure that plant and equipment brought to site for welding and burning operations is to high standard.

- that arrangements are in place for ongoing systems of maintenance;
- shall satisfy himself that arrangements in place are working effectively;
- personnel using the equipment are trained and competent for the tasks they are set;
- that arrangements are in place for checking the equipment brought to site by Subcontractors;
- shall ensure that Subcontractors are employing only welders, platers and mechanics who are competent and authorised to operate the plant and equipment they are assigned to

- shall ensure that a register of all welding plant and equipment is kept on site;

This document is the property of SPCC who will safeguard its rights according to the civil and penal provisions of the Law.

- shall review the arrangements put in place by the Subcontractors, and satisfy himself that the equipment being brought to site, is to the right specification.

Subcontractors

Subcontractors including their sub subcontractors are wholly responsible for the provision and maintenance of any plant and equipment brought to site, specifically they will:

- assign responsibility within their organisation to ensure the control and maintenance of the equipment;
- issue certificates of competence for the respective trades, to ensure that only persons competent and authorised are employed on site.

4 INTRODUCTION

A.Welding and gas cutting activities create a range of both well-known and subtle hazards, which can impact upon the health and safety of employees. These can have immediate consequences (e.g. electric shock) or have consequences that may surface only in the longer term (e.g. lung function changes over time).

B. These guidelines have been prepared in order to help prevent accidents, caused by hazards created by welding and gas cutting activities associated with the extraction industry.

C. It is recommended that in order for these guidelines to be truly effective, site-specific operating instructions should be developed and implemented and that all personnel involved in these activities are trained and deemed competent to undertake these tasks.

The following processes are commonly used on construction:

- Gas welding: the use of Oxygen and acetylene gases to fuse metal.
- Arc welding, the use of electricity to fuse together, as per the following:
  - Manual metal arc (MMA), using flux covered electrodes;
  - Tungsten Inert gas (TIG), a gas shielded non-consumable electrode process;
  - Metal Inert gas (MIG) a gas shielded consumable electrode process.
- Cutting processes where an air/arc or oxygen/fuel gas is used to melt or cut away metal.

This document is the property of SPCC who will safeguard its rights according to the civil and penal provisions of the Law.

5 DESCRIPTION OF SAFETY INSTRUCTION

These instructions provide general considerations for the control and use of welding and burning plant and equipment used on site.

- All users of such plant and equipment must be competent to perform their duties. Competency will be assessed by experience, training and where necessary by testing.
- A permit to work will be issued for all hot work activities relevant to this procedure.
- Fire watch standby with means of communication shall be provided whenever hot work is being performed: in Operating plant other than in an authorized area, if there is a possibility of other than a minor fire, or if any of the following conditions exist:

there are large amounts of combustible material present, either in building contents or construction;

there are wall, floor, or ceiling openings within 11 meters (35 feet) radius, where combustible materials may ignite in adjacent areas;

combustible materials are adjacent to the opposite side of metal partitions and may ignite by conduction or thermal radiation.

- Fire watch shall have the responsibility and authority to immediately shut down the hot work if hazardous conditions arise. His primary job shall be prevention of fire. He should be constantly on the watch for changing conditions, flammable and combustibles, spark containment and for any abnormal event. He shall be familiar with the area and potential hazards and know how to obtain assistance in an emergency. Work Permit issuer shall specify if a fire watch is needed. Normally a fire watch shall be required for all hot work in processing areas.
- In certain welding operations where there is no known risk of any flammable vapours or liquid, the welder's helper may be designated as the fire watch by the issuer of the work permit.
- Personnel working below or in the vicinity of hot work activities shall be protected by screen and barriers.
- Plant and equipment used in welding and burning operations shall be checked by the user daily for leaks and general condition. Leaks and any other equipment deficiencies shall result in the equipment being withdrawn from service until it has been rectified and made safe.
- The earth return from the welding set shall be placed as near to the job as possible.

This document is the property of SPCC who will safeguard its rights according to the civil and penal provisions of the Law.

- Confined spaces where oxygen enrichment may occur shall be checked regularly, any equipment used in the welding and burning process shall be removed from confined space when not in use.
- Where there are wet or damp conditions the requirements specified in British Standard 638 shall be observed for low voltage DC systems, whenever possible.
- Welding processes on materials such as stainless steel, zinc galvanised, lead coated and cadmium plated steel for example produce fumes and gases such as ozone, nitrous fumes and other by-products that are injurious to health. In these circumstances attention shall be made for the ventilation and reduction of such emissions produced by the process.
    - Generators shall be sited so that risks created from gases and noise are minimised and kept to a minimum.
    - Cables run from welding transformers shall be routed in a manner that prevents trip hazards and damage to them.
    - All mechanical guards shall be in position and a safe means to start the engine.
    - Welding transformers must be connected to the main supply by heavy duty cabling rated and adequate for the load.
    - Protective clothing designed or adequate for hot work activities shall be worn. e.g. Filtered eye protection, gloves, coveralls etc.
    - Hoses used on gas cylinders will be colour coded for identification. e.g. red for acetylene, blue/black for oxygen, orange for propane.
    - Hoses will be inspected before use for damage.
    - Personnel will be instructed in purging the hoses, prior to lighting, to ensure that the gases do not become mixed.
    - Flashback arrestors shall be fitted on both fuel and oxygen supplies adjacent to the regulator and at the torch.
    - The cutting of empty drums is expressly prohibited, except in circumstances where the drums have been purged and are known to be free of flammable materials.
    - Regulators and gauges shall be in good condition.
    - Acetylene pressure shall not be set at levels above the bloodline on the demand gauge.
        - Fire blankets will be used to contain sparks and to prevent injury to personnel and damage to property.

This document is the property of SPCC who will safeguard its rights according to the civil and penal provisions of the Law.

- Toolbox talks shall be conducted on the specific hazards associated with welding and burning operations.
- Every Hot work operation will be done in compliance with safety procedure.

FUME AND GAS RISKS IN WELDING AND CUTTING OPERATIONS

Welding, cutting, brazing, etc. operations can produce mixtures of fumes and gases, the composition of which depends on the welding temperature, arc intensity, electrodematerial and the gas mixture being used. Many of the fumes and gases produced are toxic.

Where gases/fumes are produced, they must be effectively disposed of either by natural ventilation or forced mechanical extraction ventilation through “elephant” trunking located adjacent to either side of the work zone as appropriate, the aim being to draw away the gas/fume from the operator without affecting the quality of the weld.

Suitable respiratory protection should be available as a back up to the ventilation system employed in case of inadequate air mixing, or the failure of the forced ventilation system.

Examples of such fumes and gases and how they are produced are as follows:

1. Fumes are derived from the vapourisation of the electrode and its coating, from the parent metal by grease, paint, etc.

i. The fumes consist of considerable quantities of very fine particles from the electrode coating. The coatings are varied and the particulate given off will depend upon their composition, such as iron oxides, silicates, ferro-manganese, and carbonates of sodium, potassium, calcium, magnesium, etc.

ii. The inhalation of many freshly formed metallic oxides, e.g. zinc, chrome, nickel,copper, manganese, etc. may lead to a general illness called “metal fume fever”.

The most common cause is work on zinc galvanised materials and work in confined spaces.

iii. Metal fume fever is characterized by raised temperature, aching muscles, shivering and sweating. These symptoms develop a few hours after exposure to the fumes and

normally disappear after approximately 24 hours.

ELECTRIC ARC WELDING /BURNING

Apart from the hazards and risks of fumes and gases, additional hazards and risks are

Introduced during electric arc welding, radiation from the welding arc and electricity adhering to simple yet effective safety rules can reduce the risks. Radiation from welding arcs consists of ultraviolet, infrared rays and intensive visible light.

The effects and the protection required are as follows:

This document is the property of SPCC who will safeguard its rights according to the civil and penal provisions of the Law.

a. Ultra-violet and infrared rays are irritating to the skin, producing a condition similar to sunburn. Suitable Protective clothing worn will adequately shield the welder.

b. Ultra-violet rays are extremely irritating to the eye; even short exposures to the welding arc produces a condition known as “arc eye” or “eye flash”. It normally appears a few hours after exposure, producing symptoms of pain, sand/grit in the eye feeling, and watering of the eyes. With treatment, the effect normally wears off after 24 hours but prolonged exposure can lead to permanent eye damage (e.g. cataracts). Eye protection must be worn incorporating suitable filters at all times.

c. Visible light from the arc is so intense that the welder must wear eye protection to view the work. The welder and any helper in the area of the task must protect their eyes with the screens, goggles or spectacles provided. The work must also be effectively screened from other workers in the vicinity.

Defective equipment or improper wiring may lead to electrical hazards and risks of fire or/and electric shock. All welding sets, cables, connectors and terminators must be maintained in good condition, be of adequate capacity for the task, and checked regularly prior to work commencing. Any defective equipment must be removed from service, tagged and labelled as “DEFECTIVE” and replaced immediately.

Electrical supply and earthing connections to welding transformers and generator sets,must be made, inspected and maintained by an Authorised/Competent Electrical

Person.

Where stationary transformers or generator sets are being used, a suitable switch must

be mounted adjacent to the equipment in order that it may be isolated from the supply

main.Diesel driven welding sets must be approved for the area in which they are sited. Engine driven machines must not be refuelled whilst in operation.

ELECTRODE HOLDERS

Electrode holders shall be provided with a handle of insulating non-ignitable material with a guard disc of similar material between the hand of the operator and the projecting line portion.

A fully insulated holder or hook should be provided to accommodate the live electrode

holder when not in use. The practice of laying the live electrode holder on gloves, face screen or hanging it up by the electric cable where it could come in contact with other equipment etc. is to be discouraged.

WELDING LEADS

Portable transformers or generator sets having trailing leads, must be provided with

This document is the property of SPCC who will safeguard its rights according to the civil and penal provisions of the Law.

Interlocked fused switch sockets and plugs, protecting both trailing cable and equipment.

All welding leads and returns must consist of flexible rubber covered cables connected where necessary by approved cable couplers. All leads shall be properly terminated and lead cable couplers and terminations must be of adequate current carrying capacity.

Welding leads and trailing electrical cables shall be inspected daily for any damage.

In the case of worn or torn cable sheaths, or flattened badly linked cables, the affected part shall be cut out and the cable made good using proper cable couplers.

To avoid long lengths of power cables the machine must be sited as close as possible to the power supply points.

A welding return lead must be provided from the neutral terminal of each phase of an

AC welding transformer or the negative terminal of a DC generator to the work piece and must be made by firmly bolting or clamping as near as possible to the point at which welding is to take place.

Where more than one operator is working from the same welding machine, the

Polarity of each welding lead and welding return must be the same. When two or

more leads are being used in a confined area, the corresponding leads must be paired, and as far as possible, the crossing of pairs with one another or with any single lead must be avoided.

In instances where welding leads trail near tanks or sumps containing hydrocarbons,

additional lengths of cable must be added to the circuit to circumvent the danger area.

Cables should be allowed free ventilation, e.g. they should not be coiled up when use.

Welding leads shall be laid out so as not to present a tripping hazard.

EARTHING AND BONDING

For all AC welding transformers, the transformer low voltage winding must NOT be earthed, but the transformer case must be effectively bonded to an earthing system adjacent to the equipment.

For all AC driven DC welding generators no earth connection must be applied to either pole of the DC welding output. The machine frame must be effectively bonded to earth. The work piece must be bonded to earth by means of a heavy section conductor having suitable clamped or bolted connections.

This document is the property of SPCC who will safeguard its rights according to the civil and penal provisions of the Law.

For engine driven DC welding generators, no earth connection must be applied to the generator output terminals. Under no circumstances shall pipelines or structures be used for earthing purposes.

REPAIRS TO SMALL CONTAINERS

This includes the welding, brazing, soldering, or cutting drums or containers (e.g. 200

litre (45 gallon) drums, petrol tanks of vehicles) which have contained petroleum products, or other flammable or combustible materials. Before any such work is carried out, the drum or container, after removal of the filler caps and draining, should be thoroughly steamed out or flushed with water and detergent, and ventilated.

Before carrying out hot work, the drum or container must be certified 'Gas Free' and the appropriate hot work permit completed. When burning or welding is in progress on a small vessel, unburnt gases can collect inside and an explosive mixture can be formed. A forced airflow or steam should be passed through the vessel, care being taken to ensure free and adequate exit for the air or steam. Compressed oxygen must not be used for purging.

The following methods are not recommended to prepare vessels for repair purposes:

a. Washing out with hot or cold water or allowing water to run through.

b. Cleaning by means of solvents such as trichloroethylene, e.g. Genklene.

All vessels sent to the workshop for repair must be certified free of gas and corrosive chemicals and certified as such by a Responsible Person signing the Plant Cleaning Certificate.

PROTECTIVE CLOTHING AND EQUIPMENT

Personnel engaged in welding, cutting, chipping and grinding operations must wear the appropriate protective clothing/equipment provided, e.g. goggles, face shields, welding helmets, welding screens, gloves, leather chrome aprons, etc. Other personnel in the vicinity who could be affected by this work shall also wear the required protective clothing/equipment.

Gloves or gauntlets made of leather or some other non-ignitable material are required for shielding the hands and arms from sparks and heat radiation of the welding arc.

Sleeves of similar material should be used in addition to gloves if gauntlets are not worn.

NOTE: Leather gloves and gauntlets give no protection against electrical hazards.

For some classes of welding, e.g. where the welder is standing at a bench, the head screen and gauntlets may well provide sufficient protection. A thick apron of leather or other suitable material may be needed if the welder is sitting at his work position, where molten metal may

This document is the property of SPCC who will safeguard its rights according to the civil and penal provisions of the Law.

fall upon his thighs and legs. If the arc is above the level of his shoulders or overhead, complete protection for the head, shoulder, arms and

upper part of the body is necessary. The requirements for PPE shall form part of the risk assessment undertaken prior to any burning, welding or grinding task taking place.

Apart from eye flash, another common cause of eye injury is the chipping away of slag that covers the weld when coated electrodes are used. In these circumstances a helmet with a double screen should be used, the outer cover lenses consist of a clear safety glass window, while the inner contains an optical filter glass which absorbs arc radiation. Screen can be simply adjusted to bring either or both screens into use. Alternatively, clear glass safety goggles may be worn in conjunction with the use of a hand screen.

PREVENTION OF FIRE AND EXPLOSIONS

Welders and helpers must, at all times, be alert to the dangers of fire and explosion. Within restricted areas, no welding or cutting may be done without a risk assessment and hot work permit, and the conditions laid down on that permit must be strictly observed.

Welding booths and screens must be of a fire resistant construction and the interior surfaces should be such as to minimise the reflection of dangerous rays. There shall be means for thorough ventilation. Work must be screened to prevent sparks from flying outside the immediate welding area and all combustible material must be removed if there is danger of ignition.

When working at a height, precautions must be taken to prevent welding rods and spent stubs from falling. Non-combustible screens must surround the work area to prevent scatter of sparks and hot metal, particular attention being paid to the area immediately below the welding area.

An active fire watch shall be maintained by a nominated person (others may be required if there is a danger that sparks etc. can fall to areas below the welding or be carried by the wind over a large area), who shall have no other duty. This person shall be competent to undertake the work, trained and provided with suitable portable fire extinguishers, and, in addition fire blankets and a pressurised fire hose may be provided as necessary depending on location/site conditions.

Following cessation of work, the work area and any adjacent areas that may be affected shall left in a safe condition. No fuel or oxygen gas cylinders shall be taken into any confined space. Cylinders, hoses and fittings must be checked for leaks, especially from hoses and fittings within a confined space prior to work commencing. Blowpipe and hoses must not be left in vessels or enclosed spaces, when they are not in use, e.g. during a meal break or over-night.

A very small leak of any gas or oxygen, particularly acetylene, from a torch over a

This document is the property of SPCC who will safeguard its rights according to the civil and penal provisions of the Law.

Short period can make the atmosphere in the vessel dangerous. Where this cannot

be Done, the oxygen and acetylene connections must be disconnected at the cylinders Situated outside the vessel. Merely closing the valve is not a disconnection or may be Considered an adequate isolation.

Work Permits must contain the requirement for the continuous testing of the atmosphere. Welders must never coil hoses around their body when welding. Whenever equipment is to be left unattended, gas cylinder valves should be shut, electrical power for welding switched off, and any diesel driven welding sets shutdown.

This document is the property of SPCC who will safeguard its rights according to the civil and penal provisions of the Law.

PTTLNG Nong Fab LNG Receiving Terminal Project

SHE PLAN FOR CONSTRUCTION

Doc Class Z

REV.	STATUS	DATE	REVISION DESCRIPTION	BY	CHK.	APPR.

This document is the property of SPCC who will safeguard its rights according to the civil and penal provisions of the Law.

Revision list:

Rev. Nr	Modifications:
R1	First Issue
F1	Issue for Final implementing Client's comments received and improved sec: 10 and 11

This document is the property of SPCC who will safeguard its rights according to the civil and penal provisions of the Law.

INDEX

1.	SCOPE	4
2.	DEFINITIONS AND ABBREVIATION	5
3.	REFERENCE DOCUMENTS	7
4.	ROLES AND RESPONSIBILITIES	10
5.	DOCUMENT UPDATING AND DISTRIBUTION	15
6.	SHE POLICIES	15
7.	SHE MANAGEMENT SYSTEM	19
8.	SHE ACTIVITIES	27

This document is the property of SPCC who will safeguard its rights according to the civil and penal provisions of the Law.

1. SCOPE

This Plan is the main document for the application of the Safety Health and Environmental Management System (SHE MS) during the Construction phase of the PROJECT, for the scope of the present document the Environmental issue relevant to the planning activities have been reported into the details within the Environmental Management Plan doc n 122018-SPCC-C-SH-PR-0032.

Purpose of the present document is define the programs that shall be developed to enable the CONTRACTOR management to effectively sustain its commitment to Safety and Health throughout the construction phase.

Ensure the Health and Safety of the people and protection of the Environment throughout each phase of the Project will be a management responsibility and a prime consideration in all operations and activities undertaken under CONTRACTOR responsibility.

Scope of this document is:

- Identify and comply with all applicable SHE Local Laws, EIA Requirement, Project Standards and Contractual requirements, to ensure that the Project complies with them;
- Ensure the application of the CONTRACTOR Health and Safety Management System
- Define the SHE organization of the Project
- Define the SHE objectives of the Project;
- Define the SHE deliverables foreseen for the Project
- Define the SHE activities will be carried out during the Project execution, in order to reach the SHE objectives and meet the identified requirements.
- Define SHE data to be monitored and reported (number of injuries, number of SHE meetings, number of spills etc.) in order to immediately correct any deficiency of the System so ensure the continuous improvement of the SHE performance.

This SHE Plan is intended to be complimentary to the general code of practice and to the existing statutory regulations of Local Authorities, including Labour Code, Legislation with regard to medical, first aid, safety and training requirements.
All CONTRACTORs / SUBCONTRACTORs shall adhere to this SPCC SHE Plan and appoint their SHE Manager(s) and SHE Officers or so acting that must be approved prior to commencement of the work they are contacted to perform for SPCC.
The SPCC Site Manager will ensure that this document is regularly reviewed at site. All parties will be informed of subsequent revisions.

This document is the property of SPCC who will safeguard its rights according to the civil and penal provisions of the Law.

2. DEFINITIONS AND ABBREVIATION

General Project description are reported in “Project Description, Abbreviations and Definitions” (Doc. no.122018-SPCC-C-PM-GE-0002).

2.1. Definition and abbreviation specific for this document

LiHS	Leadership in Health & Safety
HRA	Health Risk Assessment
LSR	Life Saving Rules

3. CONTRACTOR LIFE SAVING RULES (LSR)


Permit to Work


Seat Belt


Smoking


Alcohol and Drugs


Confined Space


Cell Phone Use and Speed Limits


Dropped Objects


Excavation


Personal Flotation Devices


Gas Test

This document is the property of SPCC who will safeguard its rights according to the civil and penal provisions of the Law.



Journey Management



Lift Plan



Overhead Electric Power Lines



Moving and Energised Equipment



Suspended Loads



System Override



Verify isolation



Working at Height

This document is the property of SPCC who will safeguard its rights according to the civil and penal provisions of the Law.

4. REFERENCE DOCUMENTS

4.1. PTTLNG Documentation

PTTLNG'S References	Doc. N°
1602088-32016-CV-TS-003-F0	Specification for Drainage System
1602088-32016-GE-005-F0	PROJECT Reference Codes and Standards
1602088-32016-MG-TS-004-F0	Specification for Acoustical Insulation
1602088-32016-PM-GE-001-F4	PROJECT Procedures and Administrative Requirements (General PROJECT Requirement) Section 9. SHE
1602088-32016-PM-GE-008-F0	List of Documents to be Submitted During Detail Design for Each Discipline. Appendix F. Section 1.5 SHE
1602088-32016-PM-GE-015-F0	Site Safety and Security Procedure (Template)
1602088-32016-PM-GE-019-F0	Change Procedure
1602088-32016-PM-GE-028-F0	Environmental Impact Assessment (EIA). Appendix E-1 REPLACED by the Approved EIA
1602088-32016-PM-RPT-103-F0	PTT Environmental Management Plan
1602088-32016-PM-RPT-104-F0	PTT Personnel Protection
1602088-32016-PM-RPT-105-F0	PTT Environmental Specification
1602088-32016-PM-RPT-106-F1	PTT SHE Legislation
1602088-32016-PM-RPT-109-F1	PTT Corporate Worksite Health, Safety & Security Requirements
1602088-32016-PM-RPT-110-F0	PTT Corporate SH&E Pre-Qualification Expectations
1602088-32016-PM-RPT-111-F0	PTT Corporate Work Site Environmental Requirements
1602088-32016-PM-RPT-113-F0	PTT Safety and Health Management Plan
1602088-32016-CS-RPT-024-F0	Guideline for SIL Study
1602088-32016-CS-RPT-025-F0	Safety Requirement Specification (SRS)
1602088-32016-PM-RPT-009-F2	QRA Report

4.2. CONTRACTOR Project Documentation

Main documents of CONTRACTOR applicable to the Construction activities:

- PROJECT SHE Plan 122018-SPCC-C-SH-PR-0001
- SHE Procedures (detail sect 3.2.1) 122018-SPCC-C-SH-PR-0002
- SHE Training procedure 122018-SPCC-C-SH-PR-0003
- Environmental Management Procedure 122018-SPCC-C-SH-PR-0004
- Health Management Procedures and Planning 122018-SPCC-C-SH-PR-0005
- PPE Management procedure 122018-SPCC-C-SH-PR-0006
- Confined Space Procedure 122018-SPCC-C-SH-PR-0007
- Crane, Rigging and lifting, Scaffolding, Excavation work safe Procedure 122018-SPCC-C-SH-PR-0008
- Hazardous Chemicals and Substance Procedure 122018-SPCC-C-SH-PR-0009
- Emergency Preparedness and Response Procedure 122018-SPCC-C-SH-PR-0010
- Hand Tools and Machinery Safety Procedure 122018-SPCC-C-SH-PR-0011
- Work Permit Program 122018-SPCC-C-SH-PMT-0012

This document is the property of SPCC who will safeguard its rights according to the civil and penal provisions of the Law.

- SHE AUDIT procedure 122018-SPCC-C-SH-PR-0013
- Incident Notification and Investigation procedure 122018-SPCC-C-SH-PR-0014
- Simultaneous Operation Procedure 122018-SPCC-C-SH-PR-0015
- SHE Action Tracking System Report 122018-SPCC-C-SH-RPT-0016
- Emergency Preparedness and Response Plan for construction 122018-SPCC-C-SH-PR-0017
- SHE RISK Assessment and JSEA procedure 122018-SPCC-C-SH-PR-0018
- Safety Health Environment Policy 122018-SPCC-C-SH-PR-0019
- SHE Requirements for SUBCONTRACTOR and Vendors 122018-SPCC-C-SH-PR-0020
- Alcohol & Drug Policy 122018-SPCC-C-SH-PR-0022
- Waste Management Plan 122018-SPCC-C-SH-PR-0023
- Environmental Monitoring Plan 122018-SPCC-C-SH-PR-0024
- Spill Contingency Plan 122018-SPCC-C-SH-PR-0025
- Security Plan 122018-SPCC-C-SH-PR-0029
- SHE Construction Manual 122018-SPCC-C-SH-PR-0030
- Environmental Management Plan 122018-SPCC-C-SH-PR-0032
- SHE Monthly Report 122018-SPCC-C-SH-PR-0037

4.2.1. SHE Procedures detail content of doc n. 122018-SPCC-C-SH-PR-0002

Detail content of the SHE Procedures doc n. 122018-SPCC-C-SH-PR-0002

Competent Designation Form
Disciplinary actions
Heat stress Preventions
Incentive Scheme Program
Safety Inspection
Management Safety Walk
Night Work Control
Office Safety
Noise
Preventive Maintenance Program
Safety Observation Program
Safety Signs
Color Coding
Lock Out – Tag Out
Control and Use of Plant Equipment
Fall Prevention and protection Program
Housekeeping
Manual handling
Portable tools
Access control requirement in hazardous classified areas
Safe transportation
Site SHE Committee Meeting

This document is the property of SPCC who will safeguard its rights according to the civil and penal provisions of the Law.

4.3. National Laws and Regulations

Please refer to PROJECT SHE Plan doc n. **122018-SPCC-C-SH-PR-0001**

4.4. OTHER CONTRACTOR's SHE Documentation

- "Leadership in Health and Safety" (LiHS)
- CONTRACTORLife Saving Rules (LSR)

This document is the property of SPCC who will safeguard its rights according to the civil and penal provisions of the Law.

5. ROLES AND RESPONSIBILITIES

5.1. Project SHE Team

A dedicated SHE Team appointed for the Project will ensure to meet the Project SHE Objectives through implementation of procedures and technical activities.

This Team will interface with all relevant departments to guarantee that all documents produced and activities performed during the execution of the Project comply with the SHE Plan, SHE Requirements and objectives.

The SHE Team and names, along with the functions and responsibilities, is detailed in the specific Project Document “Project Organization Procedure” section attachment Site - S2

5.2. Main Management Roles and Responsibilities

According to the scope of this document, Construction phase, the following roles are responsible for:

5.2.1. CONTRACTOR Project Director (PD)

The most senior position in the overall project is the Project Director

The overall Project Director ensures the achievement of established project health and safety objectives assigned.

The Project Director function includes:

- representing CONTRACTOR with the PTTLNG, Licensors, Partners and SUBCONTRACTORs, and managing all the SHE contractual aspects;
- ensuring the review of SHE contractual documents;
- defining SHE project strategies;
- supervising site activities;
- supervising project activities regarding aspects relating to health, safety and environmental protection, through the project organization positions;
- promoting LiHS and Life Saving Rules campaigns implementation during project execution;
- Add other duties if deemed necessary.

5.2.2. CONTRACTOR SITE Manager (SM)

The SM for Construction phase/activity ensures, reporting to the Project Director the achievement of the established health and safety objectives for the assigned phase/activities in order to meet the contractual obligations, objectives set by CONTRACTOR Organization and help achieve the overall objectives for the project managed by the Project Director.

Duties include:

- representing, insofar as within remit, the CONTRACTOR with PTTLNG, Licensors, Partners and SUBCONTRACTORs, and also managing all the SHE contractual aspects;
- ensuring, insofar as within remit, the review of SHE contractual documents;

This document is the property of SPCC who will safeguard its rights according to the civil and penal provisions of the Law.

- defining, based on the instructions of the Project Director and in accordance with the project's overall objectives and strategies, the SHE strategies for assigned phase/activities and supervising the planning and scheduling of activities
- approval of Construction Safety Manual, ensuring its implementation;
- ensuring compliance with applicable and/or local SHE laws and regulation,
- undertaking a leadership role in the SHE process;
- Chair the site safety Committee dealing directly with the SHE Officer in professional level nominated for the project.
- setting standards for safe and healthy execution of construction works, and ensure full dedication by all personnel to Zero Accident Tolerance;
- ensuring that all line management and supervision conduct their duties in a manner which supports the Zero Accident Tolerance philosophy;
- ensuring the safe and healthy completion of all construction activities;
- ensuring sufficient resources are available, in terms of equipment and qualified personnel, to effectively manage SHE issues;
- ensuring that all site personnel are competent, qualified and adequately trained to perform duties given to them during the course of the construction phase;
- ensuring the provision of adequate fire prevention and protection measures and equipment;
- ensure that basic site medical facilities (first aid) and medical support are in place before and throughout constriction activities;
- ensuring that the project ERP is fully implemented;
- ensuring that CONTRACTOR line management participates, contributes actively and exercises leadership in its respective individual and collective project safety meetings;
- ensuring the CONTRACTOR PPE needs are adequately funded;
- ensuring that every work activity performed by the SUBCONTRACTOR, vendors and suppliers (if any) is executed in a safe and controlled manner;
- establishing and maintaining a direct line of communication with the CONTRACTOR Field SHE manager (FSHEM);
- implementing an employee incentive scheme;
- conducting unscheduled meetings as necessary at his discretion or on request of the CONTRACTOR Field SHE Manager (FSHEM);
- leading investigations into serious accidents or potentially serious incidents;
- supporting "accident reporting" motivation;
- implementing LiHS and Life Saving Rules campaigns during the execution of the project;

Note: in case SM is temporary not be available at Site, he will nominate a substitute and will communicate it to all concerned.

Site Manager is responsible for the interfaces with:

- PTTLNG
- Police, Civil defence and Hospital;
- Local Authorities, Municipality;
- SUBCONTRACTORs;
- Suppliers and Vendors.

Site Manager case by case availes himself of the support of the Community and Interface Manager

5.2.3. CONTRACTOR SHE Manager (SHEM)

This document is the property of SPCC who will safeguard its rights according to the civil and penal provisions of the Law.

The project SHE Manager (SHEM), reporting to the senior position in the overall Project Director (PD), shall manage and supervise Project activities within their remit relating to health, safety and the environment during Project development phase, ensuring that the SHE MS is correctly applied.

Construction's phase duties include:

- definition of Project SHE objectives in accordance with PTTLNG and CONTRACTOR SHE Policy and contractual requirements;
- ensuring preparation and the first release of the SHE Plan and Manual for the construction phase;
- coordinate and lead SHE Audit and Review activities for the project (Home Office and site);
- be the prime SPCC contact for SHE matters.

5.2.4. CONTRACTOR DEPUTY SHEM

Deputy SHE Manager acting as SHE Manager during his absence at site, reports to the senior position at site Site Manager (SM), he shall manage and supervise Project activities within their remit relating to health, safety and the environment during Project starting from the Construction phase, ensuring that the Project SHE MS is correctly applied.

- assisting construction teams in Risk Management and Occupational Safety Risk Assessment;
- ensuring that CONTRACTOR SITE Manager (SM), Construction manager (CM) and Discipline Superintendents (DS) are supported in the field controls of CONTRACTORs/Suppliers with regard to SHE aspects;
- ensuring the qualification of the set of authorization processes relevant to SHE areas required for the site (e.g. water discharges, waste, etc.) and responsibilities for their implementation;
- updating the specific site's SHE Plans, and procedures and checks that they are correctly implemented by CONTRACTOR and SUBCONTRACTOR personnel throug periodic audit at site.
- Checking all SUBCONTRACTOR's documentation in order to meet the client requirement for the Construction activities.
- Assuring weekly checks of safety conditions and monthly checks of work equipment and protective devices;
- defining emergencies scenarios, Emergency Response Plans and arrange emergency drills;
- Update and check the CONTRACTORs' SHE Plan and Manual for Construction and submits them to the CONTRACTOR Site Manager (SM) for approval;
- providing information and training of PTTLNG personnel and CONTRACTOR managers responsible for SHE;
- participating in the analysis of the causes of any accidents or injuries and also ensures the collection of data;
- supporting Project Director for the implementation of LiHS and Life Saving Rules campaigns at site.
- Verify the reports coming from the SHE Officers/Engineers
- Verify and issue the SHE Monthly report according to the contratual information required by 7th of each month to PTTLNG through the CONZOL system.
- Ensure the CONTRACTOR internal reporting according to Annex 1 by the 3rd day of each

This document is the property of SPCC who will safeguard its rights according to the civil and penal provisions of the Law.

month;

- ensure that reporting of mandatory SHE matters to the appropriate regulatory.
- authorities is timely and accurate.
- liaise with the SUBCONTRACTORS' SHE Manager(s);
- notifying the SHEM and the SM, of any SHE related incident/accident involving personnel, equipment, property or environment;
- DSHEM is responsible for deliver SHE documents and information at site to SUBCONTRACTORS and requests to them to sign on the first page of each document shared in order to onfirm the receipt.

for the Emergency Response Plan:

- report SHE incidents immediately to the SM;
- ensure plan update (scenarios, names, numbers, positions etc) and exist for dealing with potential emergency situations;
- ensure SUBCONTRACTORS have appropriate fire prevention procedures in their SHE documents, and that they apply them;
- investigate injury, damage and near miss, accidents independent of SUBCONTRACTORS SHE Manager and/or jointly with them.

for the SHE Meetings the deputy SHE manager:

- prepare and minute the Site Management Safety Meeting;
- organise, attend and participate in relevant SHE Meetings (Supervisor's Safety Meeting);
- support supervisors and foremen with specific meeting format and content as necessary;
- generate a monthly log of meetings scheduled, meetings held, topics and attendance and submit the log to the SHEM and the SM.

He/She shall conduct regular site SHE Audits, Reviews and Inspections according to this plan. The objectives are detailed in the following:

- check implementation/compliance with the SHE documentation (updating and reviewing, as required);
- conduct regular Inspections;
- check the implementation, content, participation and effectiveness of specific dedicated meetings (see 10.3 sections) verifying compliance with SPCC SHE requirements;
- examine accident reports, perform statistical analyses and publicise the results as necessary;
- prepare a monthly SHE reports, collecting all informations from all SUBCONTRACTORS and CONTRACTORS department, for the SHEM and the SM review (SHE Monthly Report Forms as per Annex1 by the 3rd day of each month, and the SHE Monthly report for PTTLNG 122018-SPCC-C-SH-PR-0037 by the 5th of each month).
- DSHE manager ensure a full set of information for the EIA compliance to mitigation measures for construction implemented into the SHE Monthly report for PTTLNG.

for the Training shall:

- ensuring that all personnel involved with Construction activities, including SUBCONTRACTORS and VENDORS (if any), are adequately instructed of the Project SHE Requirements;
- ensure training of all site personnel (on SHE matters) at any level of the project structure (SPCC Induction and trainings);

This document is the property of SPCC who will safeguard its rights according to the civil and penal provisions of the Law.

- arranged SHE training sessions (and specific training prior to start any work activity).

for the PPE shall:

- ensure compliance with local law or more stringent standards, contract, procedures, relating to the provision and use of PPE.

for the Hazard Management shall:

- ensure that all personnel are aware of the SHE requirements of their activities;
- manage the waste streams, compile and issue of documents and reports required in accordance with the Waste Management Plan and the EIA;
- plan and carry out, when necessary, studies and/or hazard analyses.

The SHEM / DSHE Manager avails himself of the collaboration of the:

- Safety Manager by Law, (CONTRACTOR SHE COORDINATOR)
- Environmental Specialist, and
- Security Coordinator.

for the following duties:

- Assure that all THAI laws, requirements are all implemented and tailor the SHE Management System under THAI law requirements.
- Coordinate all SHE and Security activities giving full support and consultant to the SHEM/DSHEM.
- Stop all work when THAI SHE and/or Security laws are not respected
- Translate from English to Thai version to all SHE & EIA relevant documents for communication before hand to the relevant involved parties (i.e. Work Permit Forms)

OHS&E Trainer shall:

Prepare and organize SHE Induction, develop and implement a training programme covering aspects such as abrasive wheels, enclosed spaces, breathing apparatus, harnesses, driving, etc, in line with Project Risk assessment results.
OHS&E Trainer shall keep the records and tracking system for the training and communicate on monthly base the relevant information for the monthly report to the DSHEM.

OHS&E Trainer ensure that personnel are aware of:

- SPCC and PTTLNG organisation and principal personnel;
- All employee SHE responsibilities under SPCC and PTTLNG rules;
- project SHE Policy and objectives;
- education and training programme;
- Health, Safety and Environmental practices;
- foreman's tool box talks;
- SHE information communication programme;
- SHE incentive programme;
- SHE discipline programme;
- Reporting hazardous conditions;
- other matters as necessary, housekeeping and sanitation procedures;

This document is the property of SPCC who will safeguard its rights according to the civil and penal provisions of the Law.

- Risk assessments.

Duties for other Environemental, Health and Security functions have been reported within the relevant documentation.

6. DOCUMENT UPDATING AND DISTRIBUTION

This plan is a live document. To ensure its accuracy and consistency, this document will be readily updated and maintained whenever the responsibilities of people involved or the specific scope of work will change.

All revisions to this document will be done by CONTRACTOR SHE Manager or DSHEM and approved by CONTRACTOR Project Director for final issue.

The distribution of this document is under the direct responsibility of CONTRACTOR Project Director / Project Manager (PM).

The SHE Plan shall be distributed to:

- CONTRACTOR Project Director (PD)
- Site Manager (SM)
- CONTRACTOR SHE Manager (SHEM);
- CONTRACTOR Deputy SHE Manager (DSHEM);
- PTTLNG/PMC
- SUBCONTRACTORs (during bidding phase, if available and update during the construction phase).
- SUBCONTRACTORS SHE Managers
- SUPPLIER
- VENDORS

7. SHE POLICIES



Construction phase, as well as each phase of the Project, will fully comply with PTTLNG Policy Statements, SPCC SHE Policy Statement.

This policy statement that reflects the commitment of CONTRACTOR's to the protection of the Environment, and the Health and Safety of its personnel and all people that could be affected by its operations, as further detailed in the following sections. The SHE Policy is the basis upon which Project SHE objectives are set.

This document is the property of SPCC who will safeguard its rights according to the civil and penal provisions of the Law.

Through the implementation of our SHE management system, the SPCC management will:

☐ Prevent accidents resulting from our activities.

☐ Assess and manage the risk which may arise from our activities for people, assets or environment.

☐ Preserve our employees' physical integrity and preserve environment.

☐ Meet or exceed the regulatory requirements of the Thai government through strict adherence to all applicable national, provincial and international laws.

☐ Report our performance against SHE objectives and targets to PTTLNG/PMC.

All SHE activities foreseen for the Project have the aim to implement SHE policy statements.
The Project has issued the following:

- SHE Policy
- Alcohol & Drugs Policy

7.1. Drugs & Alcohol Policy

Use of Alcohol and Drugs on the site shall be cause for immediate dismissal and permanent removal from the site.

Testing for drugs and alcohol without cause (at random) or following any undesirable event, accident or near-miss will comply with laws applicable in Thailand.

This document is the property of SPCC who will safeguard its rights according to the civil and penal provisions of the Law.

PTTLNG Nong Fab LNG Receiving Terminal Project

Project SAFETY HEALTH and ENVIRONMENT Policy

Project Direction recognizes the importance to deliver the PROJECT with the highest attention to safety and health of all people in any way interested by the PROJECT and for the environment that is surrounding the project that can be summarize in the motto:

"Safety from Heart "

SPCC Joint Venture is fully committed to achieving the highest standard of SHE performances by creating and maintaining a safe work condition for all personnel associated with PTTLNG Nong Fab LNG Receiving Terminal Project. Respect of Safety, Health and Environmental Laws, rules, regulations and International Standards together with the implementation of the SHE Management system, are the keys to achieve project success, continuously promoting a Project-wide culture for SHE also through specific programs (LIHS, Life Saving Rules), and by ensuring adequate training to all the involved parties. Prevention and Protection of Safety, Health and Environment is also guarantee through the application of SECURITY Plan on the PROJECT.

All of us must be aware of our personal impact on safety, health and environment while performing our work at site as well as on the communities which may be affected by Project's operations, and ensuring the efficient use of energy and natural resources.

SPCC Joint Venture shall select its project partners, Subcontractors and Vendors on the basis of their compliance with highest rules for health, safety and the environment, with a tolerance zero for those individual disrespectful of Laws and regulations and Life Saving Rules.

SPCC Joint Venture is fully committed to provide the resources necessary to implement this policy and carry out a strategy of preventing pollution and potential SHE hazards by performing their Identification, Risk Assessment and implement necessary plans and procedures and check regularly their efficacy in order to improve all aspects of workplace Safety, Health and Environment and the protection of all stakeholders in accordance but not limited to the International Standards OHSAS 18001 and ISO 14001.

All resources belonging to management team shall demonstrate to be a leader by example in the field of Health, Safety and the Environment promoting Health and Safe working practices and Environmental protection performing their own activities. The performance evaluation of each project member shall be also based on the SHE performance achieved by the Team effort.

14December18

[redacted]

This document is the property of SPCC who will safeguard its rights according to the civil and penal provisions of the Law.

PTTLNG Nong Fab LNG Receiving Terminal Project

Project Alcohol and Drug Policy

SPCC Joint Venture is fully committed to achieving the highest standard of SHE performances by creating and maintaining a safe work condition for all personnel associated with PTTLNG Nong Fab LNG Receiving Terminal Project.

Management is strongly committed to ensure that personnel employed must not partake at any time, during the performance of the work or be under the influence of any alcoholic liquor, drug or other intoxicating substance, while on duty, other than for bona fide medical reasons.

It is not acceptable to be under the influence of alcohol or drugs at work or consume alcohol or drugs this includes paid and un-paid breaks.

Use of such items (i.e. Alcohol and Drug) on the site shall be cause for immediate dismissal and permanent removal from the site.

To:

- Ensure that the JV SPCC complies with legislation and Owner's requirement;
- Minimize the risks associated with alcohol and drugs in the workplace.

To make an early identification of who may be experiencing alcohol or drug problems specific Alcohol and Drug checks will be performed within the remit of Thailand Law.

[redacted]

This document is the property of SPCC who will safeguard its rights according to the civil and penal provisions of the Law.

8. SHE POLICY DISSEMINATION

Inside the offices and on site several safety boards will be placed and SHE policies posted on. During induction and training SHE policies will be always empathized and content explained to everybody that has to completely adhere to.

Respect and dissemination of all statements is a Construction Management ad SHE Management duty.

9. PROJECT KPIs AND TARGETS

The trailing and leading indicators (KPIs) for Safety & Environment are part of the CONTRACTOR SHE reporting system.

They can also be used for setting measurable target objectives to manage SHE activities or establish safety bonuses for personnel or project.

SHE issues and performance including reporting on progress, reviews, action close out, areas of concern, incidents, mitigation measure implementation and monitoring records required in the EIA report will be part of the monthly SHE report.

Safety stats and KPI shall be also collected for internal use of CONTRACTOR according the forms attached on monthly base.

- **TARGETS FOR TRAILING SAFETY & ENVIRONMENT KPIS**

TRAILING INDICATOR	Project TARGET
Fatality (FTL)	Target = zero
Lost Time Injuries Frequency rate - LTIFR	LTIFR= 0
Total recordable injuries frequency rate (TRIFR)	TRIFR= 0,226 (PTTLNG requirement)
Road Traffic Accidents (RTA) per 1,000,000 Km driven	RTA = as reported
Waste generation	as defines based on the EIA
Energy consumption	
Water consumption	
Spills	Maximum number of spills (> 100 liters) = zero
SHE deviations notified by third parties	Zero.(Examples of deviations: notification by PTTLNG, complaint by neighboring communities, notification or fine by authorities)

According to the PTTLNG requirements all indicators are referring to 200.000 man hours.

This document is the property of SPCC who will safeguard its rights according to the civil and penal provisions of the Law.

- **TARGETS FOR LEADING SAFETY & ENVIRONMENT KPIS**

LEADING INDICATOR	TARGET
SHE Training hours	Comply with the Project SHE training schedule
Management SHE visits	(by Project management based in CONTRACTOR head offices) Project target 2 per year
Site Management Inspections	(by Site management No SHE) Project target > 1 per week [1/w recommended by PTTLNG]
Pre-job meetings	100 % realized by all teams/shifts
Tool Box Talks (TBT) weekly	100 % realized by all supervisors/foremen
Job Safety Environmental Analysis (JSEA)	Actual number is reported JSEA is required before starting any new job or any new job conditions or any hazardous job
SHE meetings	Comply with the project's Program
SHE Inspection	Comply with the Project SHE Inspection schedule
Undesirable events reported	To measure the number of SHOC cards completed To fix a target can be misleading : maximum of events reported (transparency & control) against minimum of undesirable SHE events)
Near Miss (NM)	To measure the number of NM reports completed. To fix a target can be also misleading
Investigation of notified incidents	100% investigated (including near-misses)
Km. Driven	Actual Km. reported for calculation of RTA frequency

Celebration target for LTI free shall follow the steps indicated below:

- 1 Million MH LTI FREE
- 5 Million MH LTI FREE
- 10 Million MH LTI FREE
- 15 Million MH LTI FREE
- End of the Project forecasted 17 Million MH LTI FREE

- **TARGETS FOR MEDICAL KPIS**

Health indicators are detailed in the CONTRACTOR procedure and are also part of the CONTRACTOR SHE reporting.

This document is the property of SPCC who will safeguard its rights according to the civil and penal provisions of the Law.

10. SHE MANAGEMENT SYSTEM

CONTRACTOR is OHSAS 18001:2007 and ISO 14001:2015 certified and CONTRACTOR SHE MS meet the above mentioned Standards.

In accordance with principles stated in the CONTRACTOR SHE Policy, the SHE MS is established to ensure that Health, Safety and Environmental issues are comprehensively addressed at all stages of the Project life cycle, and that all design choices and decisions are justified with respect to their implications for Health, Safety and Environment during the following phases of the Project.

10.1. The SHE Management System in the Project development

The application of the SHE MS to PTTLNG Project is based on four fundamental points:

- Organization;
- Assessment and planning;
- Implementation and operation;
- Controls and corrective actions.

10.1.1. Organization

The SHE organizational structure is composed of experts who combine the SHE skills typical of engineering with those of plant construction and commissioning (SHE Overall Management). These experts are coordinated by the Project SHE Manager which guarantees the proper application of the SHE MS during all the Project phases, and at Site by the SHE Manager.

10.1.2. Assessment and planning

The main activities carried out by the SHE Team in the assessment and planning of the various phases of the Project are:

- the identification of hazards,
- the risk assessment,
- the identification of environmental issues to be kept under control,
- the definition of SHE objectives to be pursued,
- the identification of legislation and SHE requirements to be observed,
- the preparation of SHE deliverables.

These activities also involve specialists from other disciplines and the PD and SM.

10.1.3. Implementation and operation

In order to achieve the SHE objectives defined in the assessment and planning phase all Project staff will be involved in the activities following described in this Plan.

This document is the property of SPCC who will safeguard its rights according to the civil and penal provisions of the Law.

10.1.4. Controls and corrective actions

The proper application of the SHE MS is constantly checked by the Project SHE structure. This is a control which derives from the need to keep to schedule in executing activities and to reduce unforeseen events and risks to people and to the environment.

10.2. SHE Objectives

The main objectives of the CONTRACTOR SHE MS are summarized as follows:

- identification of all potential SHE impacts associated with the Project, and application of prevention, control and mitigation measures to eliminate or minimize harm to people, damage to project or equipment, or adverse environmental damage;
- minimization of the incidents likelihood during all phases of the Project and to guarantee a safe working environment for people, in compliance with the contractual SHE Requirements and Local, National and International Regulations;
- minimizing negative effects on the environment through waste and spill management and the use of carefully thought out and executed design, procurement and construction methods;
- promotion in adopting a positive, proactive, committed health, safety and environmental culture throughout all phases of the Project;
- pursuit of continuous improvement by regularly planning, implementing, auditing, and updating the System (i.e. Plan-Do-Check-Act cycle);
- project commitment, and active and visible leadership in promoting the correct application of the Project SHE MS to ensure that all hazards and environmental impact factors related to the Project are identified, their risks and environmental impact quantified and appropriate control and mitigation measures are taken to manage them;
- Increasing the SHE culture in the workforce;
- Be always prepared and resourced to manage, contain and de-escalate emergency situations;
- Ensuring continuous improvement through periodic Management SHE Reviews.

In particular, during the execution of the Project will be assured the following specific objectives:

- SHE MS:
    - The SHE MS will be implemented in order to assure the preservation of the ISO 14001:2015 and OHSAS 18001:2007 certification.
    - Periodical Audits will be performed in order to verify the compliance with the applicable laws, CONTRACTOR requirements, relevant international standards and the control of the Sub-CONTRACTOR.
    - A specific training program will be developed in order to cover all the training needs of the workforce, ensuring the compliance with the relevant project requirements, laws and regulations, applying where possible the standardized courses of the CONTRACTOR
    - Proper communication between Project staff and the upper levels of CONTRACTOR Group will be ensured in accordance with the relevant applicable standards and procedures.
- Health:

This document is the property of SPCC who will safeguard its rights according to the civil and penal provisions of the Law.

- CONTRACTOR promotes Health campaigns and programs will be actively sustained and implemented by the Project Team.
- All the CONTRACTORSs and its SUBCONTRACTORs personnel involved in the execution of the project will be subjected to a Medical Fitness Examination following the Health Project requirements.

  Detailes reported within the Health Management Procedures and Planning doc n 122018-SPCC-C-SH-PR-0005

- Safety:
  - The Project management will establish and pursues the Project Annual Safety Performance Targets.
  - CONTRACTOR's promoted Safety campaigns and programs will be actively sustained and implemented by the Project Team.
  - Incident Investigations outcomes and Project Safety Performance data will be reported and shared within the CONTRACTOR HO in accordance with the relevant CONTRACTOR standards and procedures
  - All the possible emergency scenarios will be properly assessed in order to minimize the emergency magnitude. Periodical drills will be performed at Site in order to ensure the prompt and efficient response to all the emergency reasonably foreseeable.
- Environment:
  - Project Team is committed to reduce energy consumptions, increase energy efficiency and, whenever possible, to prefer the use of renewable energy during the Project execution.
  - Natural resources saving (especially for water use) will be strongly promoted and encouraged.
  - Environmental impacts including (waste and spills) due to the Projects activities will be properly assessed and managed.
  - The Environmental performance data will be reported and shared within the CONTRACTOR's management respectivelly in accordance with the relevant CONTRACTOR procedures

    Detailes reported within the Environmental Management Plan doc n 122018-SPCC-C-SH-PR-0032.

Further SHE Objectives can be defined at a later stage according with the Project needs.

10.2.1. Objectives Management Review

Project Management will review, at least once per year, the Project SHE MS in order to ensure its continuing suitability, adequacy and effectiveness, giving its feedback to the CONTRACTOR HO.

Annual Objectives and Targets will be reviewed in the following cases:

- When the targets are failed or not reasonably achievable
- In case of project top management changes
- In any case, at least, once per year.

This document is the property of SPCC who will safeguard its rights according to the civil and penal provisions of the Law.

10.3. Leadership and Commitment

CONTRACTOR Project Management will demonstrate strong and visible leadership and commitment concerning Health, Safety and Environment management, and will be directly involved and responsible for the SHE MS implementation.

Project Management will work actively and systematically on SHE issues within the organization, and ensure that all decisions and practices are in line with the principles of the SHE MS.

Such commitment will be transmitted to all the levels from the PD down throughout the organization.

CONTRACTOR commitment will be realized through and witnessed by:

- Positive and proactive SHE attitude by the Project Management and the work force
- Visible management participation in activities as SHE meetings, audits, accident investigations, reviews and hazard identification system
- Leading periodical SHE walk about
- Planning and implementation of SHE action plans, assessment of results and initiation of corrective actions for continuous improvement
- Planning and organizing the work in a safe manner prior to executing the tasks, by conducting Risk Assessments for all the operation to be performed and in particular for non-routine and hazardous activities
- Provision of suitable training, supervision, information and instruction to all concerned personnel
- Regular, active and responsible participation of all personnel in SHE training courses, Job Safety Analysis, Tool-box Meetings, which have to be conducted by suitably qualified SHE personnel
- Providing safety of the personnel, safe site, equipment, personal protective equipment and safe systems of work
- Acceptance and accountability of the responsibility for accidents and incidents in the workplaces
- Performing of accident investigation and review of occurred accidents, and further identification of remedial and preventive actions
- Introduction of systems to encourage all workforce in providing suggestions and proposals for improvements in SHE performance

10.4. Leadership In Health And Safety Program (LiHS)

CONTRACTOR has developed an innovative and highly interactive training program with the aim of creating and enforce a strong Safety and Health Culture within the organization starting from the Management: the Leadership in Health and Safety Program (LiHS).

In order to achieve this cultural change, the main objective of LiHS is to begin the improving process of our managers in fully matured Safety Leaders.

A clearly defined top down strategy enables each level of management to become safety ambassadors, sponsoring the next levels in order to touch every manager within the organization, and in addition delivering critical safety messages down to every employee.

This document is the property of SPCC who will safeguard its rights according to the civil and penal provisions of the Law.

In addition to this, an innovative bottom-up approach was developed, which utilizes the 'personal social influence' of selected employees who actively work to instil the 5 leading behaviours into the organization at local levels.

The implementation of the LiHS program will be evaluated by CONTRACTOR Management for the CONTRACTOR's personnel.

The opportunity to extend the LiHS program to other personnel involved in the Project, if any, will be evaluated according to the PTTLNG requests.

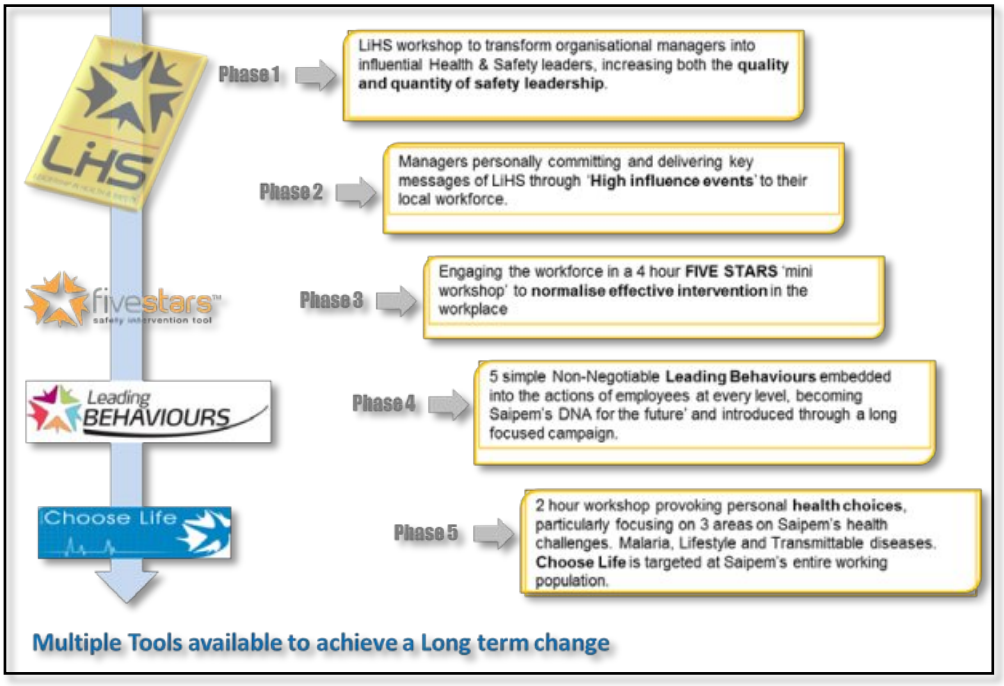

10.5. CONTRACTOR Life Saving Rules Campaign

CONTRACTOR has launched within its organization a new safety campaign, called "Life Saving Rules". These rules are already present within CONTRACTOR's (Saipem) existing SHEMS, programmes, procedures and policies; their purpose however is to give a heightened awareness of the activities which are most likely to result in fatalities.

They are based on the International Association of Oil & Gas Producers Life Saving Rules (Report No. 459 April 2013 (Version 2), who made their material freely available to implement. As the IOGP strongly recommends, the rules have been adapted to reflect CONTRACTOR's communication style, use of multiple languages, and complexity of diverse operations. The fundamentals of each rule and icon remain the same.

This document is the property of SPCC who will safeguard its rights according to the civil and penal provisions of the Law.

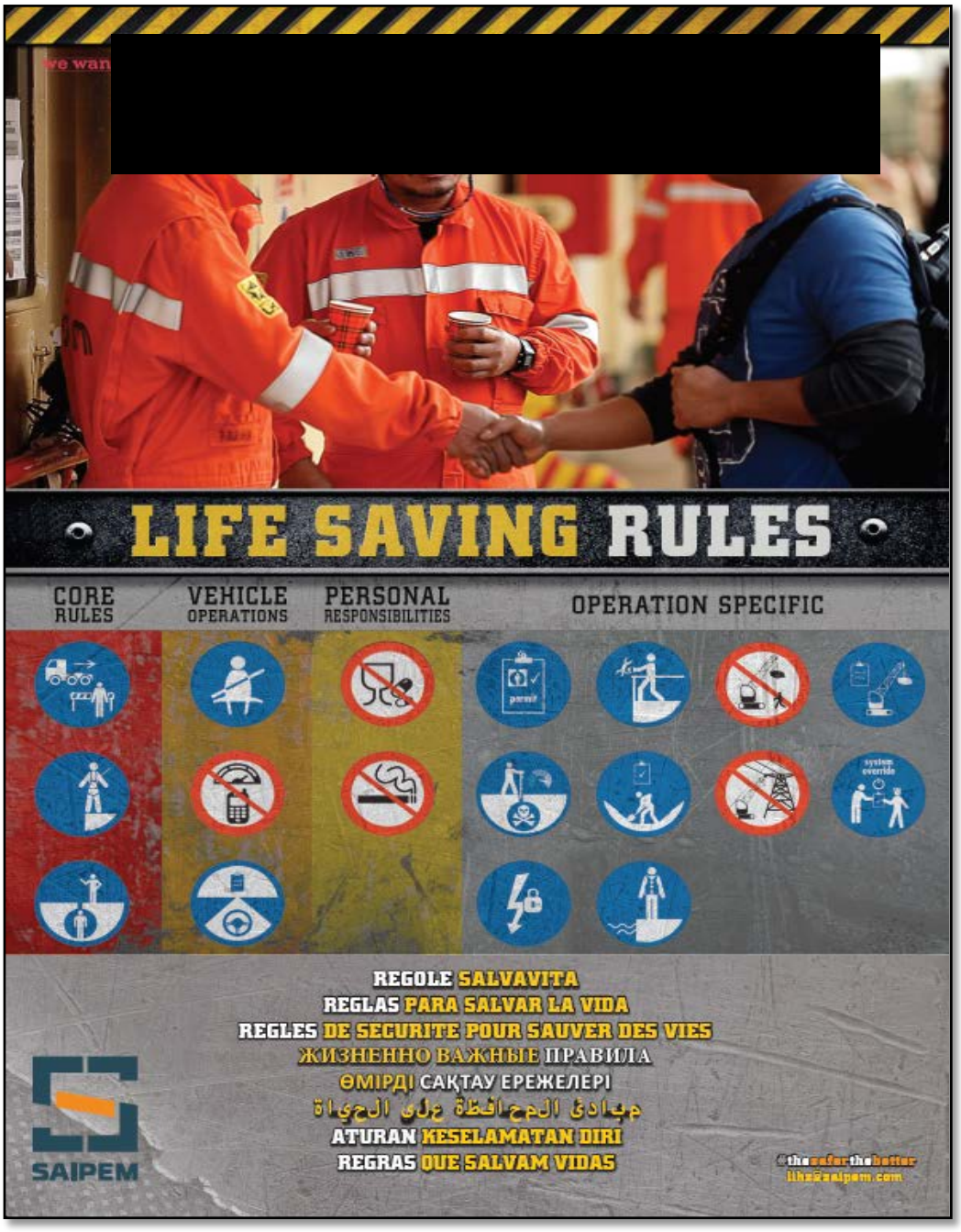

The Campaign will be divided into 3 phases, and the aim is to communicate/cascade each phase to the workforce in an effective way, planning the release appropriate to the local operational contexts, and through meetings, toolbox talks, specific events etc.

1) Campaign Launch.
2) Progressive organisation-wide release of the 3 ‘Core Rules’.
3) Release of the remaining rules as a toolkit.

This document is the property of SPCC who will safeguard its rights according to the civil and penal provisions of the Law.

11. SHE ACTIVITIES

11.1. Activities Overview

The main SHE activities that will be carried out during the Construction phase of the Project will refer to:

- Identification and assessment of SHE risks for the contracted job, covering hazardous equipment, workplace hazards, hazardous substances and harmful agents;
- Choice and implementation of risk mitigation measures;
- Implementation of specific ERP in case of emergency occurrence;
- Issuing and implementation of safe working procedures for performing hazardous jobs, briefing of all personnel involved with the work regarding hazards and know-how of their avoidance;
- Preparation and implementation of project SHE training program to increase the level of knowledge for all the people involved in site activities;
- Performing routine checks of site firefighting and safety equipment to ensure they function correctly; routine checks on personnel working practices, ensuring they wear proper site clothing and PPE;
- Implementation of accident / incident investigation reporting procedure and monitoring that corrective actions to prevent reoccurrence of accidents are implemented;
- Reporting to CONTRACTOR organization and to PTTLNG the status of planning and implementation of activities to ensure safe construction activities;
- Inspecting all machinery, tools and equipment used;
- Perform periodically audits and inspections to ensure the correct SHE management.
- Implementation of Training Matrix;
- Verification of the monthly inspection of equipments and gears completed by CONTRACTOR and SUBCONTRACTORS.

CONTRACTOR developed Safety Construction procedures according to the Contractual requirements and collected them all together into the *"Construction SHE Manual"*, that shall comply with PTTLNG and CONTRACTOR requirements together with relevant industry codes, practices and norms and any mandatory regulation imposed by THAI authorities.

SHE Audits and inspections will be performed by CONTRACTOR during the Construction Phase of the Project, in order to ensure that the site activities shall be executed in accordance with the applicable laws, Safety Codes, SHE requirements, Regulations and good operations practices.

Each SUBCONTRACTOR SHE Manager is required to provide signed copy of the CONTRACTOR's Policy/Manual/Plan and procedures to confirm that he has read, accepts and understood.

It's responsibility of each SUBCONTRACTOR to define which specification may apply to their scope of work and provide justification for not being applicable for the CONTRACTOR's final approval.

SUBCONTRACTOR shall bring to the attention of SHE department any totally or partially misalignment /inconsistency/not applicability of the documents in this plan.

The acceptance of the SUBCONTRACTOR's SHE documentation doesn't relieve the SUBCONTRACTOR to strictly adhere to THAI regulation and applicable Site SHE rules.

This document is the property of SPCC who will safeguard its rights according to the civil and penal provisions of the Law.

11.2. SHE Deliverables

Full list into the Project SHE Plan 122018-SPCC-C-SH-PR-0001

11.2.1. SHE Manual for Construction and relevant Procedures

The SHE Manual defines all safety working procedures together with those stated at section 4 of the present document that CONTRACTOR will apply during the Construction phase of the Project in order to properly face the SHE hazards that characterize the tasks forming the job and to avoid SHE accidents occurrence.

The SHE Manual constitutes a reference document for the SHE hazards identification, and control relevant to the whole Construction, stages.

Additionally, the SHE Manual will state provisions for PPE, Safety signs and Barriers, inspections, audit, critical lifting and planning, etc.

This document will contain Site SHE procedures to be implemented together with the others as per section 4.

All specific SUBCONTRACTOR procedures for site activities shall be subject to SHEM/DSHEM at site for monitoring and approval.

In cases where SUBCONTRACTOR'S work procedures do not meet the required project standards, the SHEM at site will assist in the development of the appropriate procedures and assist the SUBCONTRACTOR in developing an approach to comply with the procedures.

The procedures may be modified and expanded (by the SHEM at site), as required, throughout the duration of the Construction phase.

For all hazardous materials used by the SUBCONTRACTORS, the SHEM at site shall ensure that:

- Inventory of Chemical is at site 1 month in advance of hazardous material arrive at site
- SDS (safety data sheet) is obtained 1 month before delivery to site of any hazardous material;
- there exist appropriate facilities for proper unloading and storage;
- information on the hazards of the materials is properly communicated to the users;
- employees shall be trained in the safe use of the materials, including personal protective equipment and emergency procedures;
- copy of the SDS shall be available to all personnel in the area where the hazardous material is being stored or used,
- a written procedure exists for their use and disposal.

The SHEM at site shall also ensure that an inventory of the SDS is kept and made available on demand and also on site first aid room/clinic and on the place where the substance has to be used.

The following are among those which should be in the inventory:

- Paints, coatings, thinners, solvents and cleaning agents;
- Insulating materials such as fibre glass and ceramics;
- Sandblasting materials;
- Compressed gasses such as oxygen, nitrogen, argon, helium, acetylene;

This document is the property of SPCC who will safeguard its rights according to the civil and penal provisions of the Law.

- Greases, oils, and other lubricants;
- Fuel such as gasoline, diesel, kerosene;
- Epoxy resins / sealant;
- Bulk containers of household products and disinfectants;
- Cement.

11.2.2. SHE Risk Assessment

CONTRACTOR shall provide information and input as required into PTTLNG's Report on Protective Measures for Operational Safety as required by Notification of the Ministry of Industry No: 3 (BE 2542) issued under the Factory Act BE 2535. The information shall be supplied based on the safety reviews, hazard and risk assessment carried out by CONTRACTOR.

CONTRACTOR's management will ensure that every work activity performed under the CONTRACTOR responsibility, by CONTRACTOR and its SUBCONTRACTORs, vendors and suppliers is executed in a safe and controlled manner.

For each activity performed during Construction, Pre-Commissioning and Commissioning phases, a Qualitative/Quantitative Risk Assessment will be prepared.

All tasks will be subject to a written Method Statement, a Risk Assessment (RA) / Job Safety Environmental Analysis (JSEA) carried out by competent persons, and submitted to SHE and Construction representatives for review and approval.

A RA shall be required for each SUBCONTRACTOR activity, and mitigation measures shall be implemented before work commences.

Carry out a RA means to make a preliminary evaluation of risks and the evaluation of residual risks as result of the application of mitigation measures; the methodology deriving from the definition of risk is applied using a Risk Matrix:

- Probability Rate (P): quantification of the probability that a dangerous situation may result in harm to the exposed personnel;
- Severity Rate (S): quantification of the magnitude, namely the severity of the consequences for the exposed personnel that may cause harmful situations to degenerate;
- Risk Rate (R): the product of the probability rate (P) by the severity rate (S).

The complete process will be detailed in *a specific CONTRACTOR document* SHE RISK Assessment and JSEA procedure 122018-SPCC-C-SH-PR-0018

A separate document shall be issued the risk assessment of all activities performed on the project during each phase, specifically for construction into the doc n. 122018-SPCC-C-SH-RPT-0005 SAFETY RISK ASSESSMENT FOR CONSTRUCTION

11.2.3. Job Safety Environmental Analysis

The Job Safety Environmental Analysis (JSEA) is an excellent and efficient technique for identifying unsafe conditions and acts in the working environment.

A JSEA is intended to analyse the individual steps or activities, which create a job or specific work duty, and to detect any specific potential hazard that may be released in the working environment.

Before starting every activity under the CONTRACTOR responsibility, Construction and SHE representatives will be accountable for a Job Safety Analysis (JSEA), bearing in mind:

This document is the property of SPCC who will safeguard its rights according to the civil and penal provisions of the Law.

- The related Safety Manual procedure;
- The risk assessment;
- The available equipment;
- The other interfering activities;
- The number of workers to realize the job;
- The existing environment (including weather conditions) where the work has to be executed.

The resulting JSEA will be recorded and updated if any element should change.

The JSEA is commonly used to identify less obvious or specific potential hazards that may go undetected or being missed during routine management observations or audits or during the general RA analysis.

Moreover it:

- Can be performed relatively quickly for less protracted tasks.
- Identifies actual and potential physical hazards in the work environment, and helps determine how they should be managed.
- Reveals hazardous motions, postures, activities or work practices of individual employees.
- Assists personnel on how to perform operations, by breaking the job task down into individual steps and identifying risk and control measures for each individual step.
- Improves efficiency by identifying incorrect procedures or work instructions.
- Increases employee involvement in the safety process.
- Enhances communication between management and employees regarding safety concerns.
- Contributes to the productivity of a job by eliminating or reducing its injury potential.

The complete JSEA Methodology will be detailed in *a specific CONTRACTOR* procedure

SHE RISK Assessment and JSEA Management doc n 122018-SPCC-C-SH-PR-0018

11.2.4. Emergency Response Plan

The Emergency Response Plan has the aim to approach a site emergency and demonstrate that all the possible hazardous situations are properly identified, managed, reported and dealt with a safe, efficient and effective manner.

The ERP will describe the emergency system that the CONTRACTOR applies to the Project, in order to face the accidents that can occur during Construction phase.

CONTRACTOR initial ERP will be reviewed, if necessary, with PTTLNG to coordinate the mobilization of the following resources into a global ERP:

- the community (firemen, hospitals and doctors, police force, etc.);
- PTTLNG resources.

The ERP will be transmitted to:

- Control Personnel;
- Emergency Services;
- Employees who may be affected;
- PTTLNG/PMC Representative;
- Others likely to be impacted.

This document is the property of SPCC who will safeguard its rights according to the civil and penal provisions of the Law.

and will cover:

- organization, responsibilities, authorities and procedures including the maintenance of internal and external communications;
- systems and procedures for providing personnel refuge, evacuation, rescue, medical treatment and repatriation;
- systems and procedures for preventing, mitigating and monitoring environmental effects of emergency actions;
- procedures for communicating with authorities, relatives, the media and other relevant parties;
- arrangements for training response teams and for testing emergency systems and procedures;

The scenarios will be covered as a minimum by the ERP:

- worksite injuries
- safe escape and evacuation from site during emergencies;
- natural disasters (e.g. earthquakes);
- road traffic accidents;
- fire and explosion;
- missing person.

Deliverable: Emergency Response Plan for Construction 122018-SPCC-C-SH-PR-0031

The SM for the Emergency Response Plan for construction shall:

- ensure that basic site medical facilities (first aid) and medical support are in place before and throughout Construction Works;
  ensure that the Emergency Response Plan is fully implemented and regularly tested in the emergency drills;
- attend and participate in relevant SHE Meetings
- ensure that SPCC line management and supervisors participate, contribute actively
- and exercise leadership in their respective individual and collective project safety meetings;
- ensure that SHE is a regular agenda item at site management meetings;
- conduct unscheduled meetings as necessary at his discretion or on request of the SPCC SHEM/DSHEM or site Safety manager

11.2.5. Environmental Management Plan (EMP)

The Environmental Management Plans, specifies the requirements and methods for the management of the environmental issues concerning the site activities of the PROJECT. The document includes Environmental Mitigation Measures of the EIA.

The document aims to meet applicable legal Environmental Requirements and minimizing the environmental impacts due to site activities, as in the scope of CONTRACTOR SHE MS, SHE Policy, and ISO 14001 Standard “Environmental Management Systems – Requirements with guidance for use”.

This Plan is a living document, and will be reviewed and updated as necessary in order to ensure its adequacy; moreover it will be updated with reference to all construction and commissioning activities.

This document is the property of SPCC who will safeguard its rights according to the civil and penal provisions of the Law.

The main objectives of this Plan are to:

- Minimize the environmental impacts due to site activities;
- Comply with all applicable legal and other environmental requirements;
- Continuously improving site environmental performances.

These objectives are pursued through the following activities:

- Identification of main applicable environmental requirements;
- Description of site SHE roles and responsibilities, with particular respect to environmental activities;
- Identification and assessment of the significant environmental aspects deriving from construction activities;
- Selection of environmental impact minimization and control measures: noise production, atmospheric emissions and dust generation, interference with subsoil/groundwater, waste and waste water generation;
- Adoption of plans/procedures for managing specific environmental aspects;
- Collecting and Reporting environmental data;
- Planning audits to verify the correct implementation by Contractor personnel of the Project Environmental Management System and this plan and detailed control and management plans prescriptions;
- Planning “Legal compliance audits” in order to assess compliance with specific Project environmental legal and other requirements concerning significant environmental aspects.

Preventive measures in order to minimize dust production, emissions to air and noise production will be undertaken.

Therefore, as for the above description, this document cover and describes also all the aspects related to environmental inspection, incident reporting, role and responsibilities (staffing) and training.

The document also contain the specific forms to complete with all the environmental data (e.g Energy and water consumption, waste, etc.).

The document includes the Environmental Mitigation Measures according to EIA, however separated document has been issued as Environmental Monitoring Plan.

Details in the Environmental Management Plan 122018-SPCC-C-SH-PR-0032

11.2.6. Waste Management Plan (WMP)

The Waste Management Plan will provide the guidelines to manage waste and wastewater produced during Project Site activities in order to ensure that each phase (collection, storage, transportation, reuse, recycle and disposal) is appropriately managed with respect to its implications on the environment and in accordance with EIA, International agreements, National Laws and requirements, including contractual ones.

This guideline will be followed by all CONTRACTOR and SUBCONTRACTOR employees throughout the site activities of the Project.

The WMP is of primary importance in ensuring that disposal/facilities options are selected and justified with respect to their implication on the environment.

This document is the property of SPCC who will safeguard its rights according to the civil and penal provisions of the Law.

The scope of the WMP is to:

- Describe how the wastes will be managed (handling, collection, storage, transportation, disposal and record keeping);
- Provide guidance to the Contractor personnel for managing their wastes effectively and within the applicable waste regulation requirements;
- Provide guidance for the collection, handling, and temporary storage of each waste generated during operational activities to protect human health and to minimize the impact on the environment;
- Control the amount of waste generated following good operating practices and respecting waste reduction principles;
- Give guidance for waste reduction according to the hierarchical application of the practices of reuse, recycling, recovery, treatment and final disposal in approved disposal sites.

The WMP is a living document, which shall be updated and reviewed as necessary on site according to actual site conditions and actual waste streams being generated.

Reference : 122018-SPCC-C-SH-PR-0023 Project WASTE Management Plan

This document is the property of SPCC who will safeguard its rights according to the civil and penal provisions of the Law.

11.2.7. Spill Contingency Plan

During the course of site activities, every effort shall be made to ensure that all activities are conducted so to avoid the risk of spills or, if an incident were to occur, to implement measures and actions to prevent its escalation.

The Spill Plan has been prepared and it shall implemented by CONTRACTOR to ensure the management and the control of accidental discharges or spills during the site activities.

This Plan identifies impacts and related mitigation measures to be considered during construction and commissioning activities.

Based on the EIA requirements if any and the identification of the main situations in which a pollutant spill might occur, the plan describes strategies for spill prevention and response.

This Plan details the overall response coordination to spills of hazardous substances associated with site activities in order to organize the control, alert and intervention systems which shall be in function, so as to avoid and, in case, reduce any potential pollution.

Therefore, the basic scope of this Plan is:

- To identify the relevant types of spills and the scenarios which could be possibly lead to pollution (air emissions, noise and vibration, water pollution and liquid waste disposal, solid waste management, accidental spills/discharges of oils/fuels, etc.);
- To identify the prevention strategies (measures) and the response actions adopted during and immediately after the release of pollutants to control the event;
- To describe the organization that shall deal with the problem, both during the prevention and emergency intervention phases (including absorbent pads, containment and clean up equipment to be held and its location);
- To establish the procedures to be adopted for alerting those bodies in charge of emergency management, both within the construction site structures and at higher levels (concerned Government Agencies, etc…), and other response plans;
- To identify the material temporary storage areas (contention walls, waterproofing of soil,..).

CONTRACTOR has overall responsibility for the Spill Prevention on site during site activities.

All employees shall be aware of, and informed about the provisions of the Plan.

This guideline will be followed by all CONTRACTOR and SUBCONTRACTOR employees throughout the construction activities of the Project.

Reference 122018-SPCC-C-SH-PR-0025 Project Spill Contingency Plan

This document is the property of SPCC who will safeguard its rights according to the civil and penal provisions of the Law.

11.2.8. Health Plan

CONTRACTOR has developed a comprehensive Health Management System based on the logic of prevention, and putting a focus on the employees' health protection. CONTRACTOR will apply this Health Management on the Project, and will implement all its health related procedures aiming to safeguard employees' health. The system will be based on CONTRACTOR procedures, PTTLNG requirements for the Project and the applicable regulatory legislation. CONTRACTOR will develop project specific Health Plan that will serve as main tool for health management on the Project.

All works undertaken by Contractor will be carried out in accordance with the guidelines in the overall PTTLNG and CONTRACTOR SHE policies and related SHE objectives. CONTRACTOR will comply with PTTLNG Health related requirements and its Corporate standards for development of medical facilities on the Project.

Described below are the main aspects that CONTRACTOR will take into consideration in developing health management system and health related documents:

- Development of Health Programs;
- Health Risk Assessment;
- Health Plan (Minimum Health Standards for the Project);
- Fitness to work;
- First Aid and medical emergency response;
- Training program for medical and paramedical personnel;
- Hygiene Surveillance.

122018-SPCC-C-SH-PR-0005 Health Management Procedures and Planning

11.2.9. Health Risk Assessment (HRA)

CONTRACTOR has developed Health Risk Assessment procedure that is to be implemented on the Project during the construction and commissioning phases. The procedure describes the process of identification, evaluation and control of potential health hazards and health risks intending to protect and consequently safeguard the employees' health. It is created for helping both the assessor and the line management, who are ultimately responsible for ensuring that the health risk assessment is undertaken. It is also aimed to help the occupational doctors who are conducting employees' fitness medical examinations to understand the health hazards and risks to which they are exposed on each specific worksite. The whole HRA process includes several steps, which include the following:

- To identify the health hazards, hazardous activities, and the exposed personnel
- To assess the health risks and set priorities
- To establish Control Measures
- To establish Recovery Measures
- To formulate and monitor Remedial Action Plans (RAP) -To record the HRA
- To review the HRA

The risk associated with a particular activity is judged by estimating the probability and consequence in relative terms, 'low,' 'medium' or 'high,' and combining the two using previously agreed rules. This approach to the expression of risk is adequate for many types of evaluation, allowing for a structured approach to be adopted in situations where more precise numerical methods would be inappropriate.

This document is the property of SPCC who will safeguard its rights according to the civil and penal provisions of the Law.

The health risk matrix is the tool in ranking health risks. A ranking is obtained by assigning each identified health hazard within the activity a severity and likelihood, based on their potential to cause ill health and the history of previous exposure. Entering different risks on the matrix enables priorities for healthcare management to be set and mitigation measures planned. A comparison between the required controls and current controls will enable the identification of any gaps.

CONTRACTOR will conduct project specific Health Risk Assessment which will provide guidelines for identification, evaluation and control of potential health hazards and health risks intending to protect and consequently safeguard the employees' health. This assessment must be carried out for all stages of the Project starting with the survey activities and will be amended if there will be any changes to existing activities. Based on the hazard identification CONTRACTOR will implement certain controls measure (develop customized programs) in order to minimize the adverse effects of all identified health hazards. As heat stress, dehydration and high noise levels are common health related climatic hazards we have established programs aiming to control the exposure and the effects.

Details into the 122018-SPCC-C-SH-PR-0005 Health Management Procedures and Planning

11.2.10. Medical Emergency Response Plan (MERP)

Medical emergency is a situation in which due to illness or an accident there is the danger of losing a limb, an organ or life. Medical emergencies require timely clinical and surgical intervention capabilities. Therefore, at their first indication, pre-defined procedure shall be activated, in order to immediately involve the first aiders, medical personnel, medical facilities and the Project Management. Immediate intervention is essential, because actions performed in the first minutes of emergency determine the final outcome.

In order to face possible emergencies on the Project, CONTRACTOR will prepare specific evacuation plan for medical emergencies. The plan shall consider the specific needs for the work activities that will be performed.

The elaboration of the plan will be preceded by a survey of the geographic area where the Project will take place. The scope of the survey will be to evaluate the environmental conditions of the site where working activities will take place and the main local medical structures that may be utilized in case of emergency evacuation.

The main chapters to be developed for the MERP will be developed in the following order:

- Definition;
- Scope;
- Responsibilities;
- Lines of communication;
- Medical Evacuation actions:
- Primary Evacuation;
- Secondary Evacuation;
- Repatriation;
- Personnel in charge and their actions.

Moreover, the plan will contain:

- Telephone numbers to contact
- Medical Emergency Transportation chart;

This document is the property of SPCC who will safeguard its rights according to the civil and penal provisions of the Law.

- Medical Emergency Communication flow chart;

Details into the 122018-SPCC-C-SH-PR-0005 Health Management Procedures and Planning

11.2.11. SHE Training and Information Program

SHE training requirements will be identified as the gap between what an individual needs to know, in order to ensure the assigned tasks are performed safely and healthy, and what he actually knows (due to training / qualifications / previous experience).

To provide information, instructions and training, CONTRACTOR will put in place a specific SHE Training Program for workers, on the basis of minimum SHE training needs, with the scope of familiarizing personnel with the rules to enforce in order to prevent injuries/accidents occurrence and allow staff work competently, safely and healthy in the tasks allocated, to increase efficiency and employee job satisfaction.

The CONTRACTOR SHE Team has the responsibility to organize and plan the SHE induction course for all workers and specific training for supervisors, SHE officers, emergency team and critical works or activities.

The CONTRACTOR Training Program is composed of not limited to:

- *Site SHE Induction for every employee entering the site;*
- *General SHE Orientation for every employee working on the project;*
- Training course for workers, supervisors and SHE personnel, as per training matrix
- Emergency response and rescue drills;
- Environmental training;
- Training refreshing courses for workers and supervisors.
- Tool-Box talks;
- Daily Job Specific SHE Talks;
- Others as deemed necessary.

General awareness of health, safety and environmental issues will be introduced during the General SHE Orientation and Training for all project personnel, with particular attention to items including, but not limited, to: Permit to Work, firefighting, safety signs, housekeeping, hand tools and power tools, health diseases, scaffolding, manual handling, confined spaces, working at height, use of PPE's and escape; SHE Policy statements and individuals' SHE responsibilities will be included as a fundamental requirement in orientation training.

Wider description within the SHE Training Procedure 122018-SPCC-C-SH-PR-0003

CONTRACTOR and SUBCONTRACTORS are responsible for deliver all necessary training, to each own employees, at their own cost.

SUBCONTRACTORs is required to continually reinforce the SHE message to their employees on general Site rules and train them in the SHE Requirements of their particular job.

If relevant with the performed activities, CONTRACTOR and SUBCONTRACTORs will inform their employees on:

- Risks identification, assessment & management (Job Safety Analysis, work permit, environment awareness etc.);
- Personnel fitness (periodical medical check-up and/or vaccinations etc.)
- General operation safety (stepping-handling-lifting, personal protective equipment, working at

This document is the property of SPCC who will safeguard its rights according to the civil and penal provisions of the Law.

height);
- Logistic safety (lifting gear, crane, forklift, container, motor vehicle transportation, personnel lifting);
- Mechanical safety (welding, cutting, sand blasting, painting);
- Pressure safety (compressed air, high-pressure circuits, pressure vessels, pressurized operations);
- Electricity safety (earth, lock out-tag out, classified zones);
- Safe handling and disposal of Hazardous material (fuels, acetylene, oxygen, radioactive materials, reactants etc.);
- Pollution control and environmental protection;
- Selection, use and care of all types of personal protective equipment;
- Life-saving and escape techniques (first aid, firefighting, emergency response/preparedness);
- Work at Height;
- Basic Safety Work practices for working on the sea
- Basic firefighting training for all workers;
- Chemical and Hazardous release;

Subcontractors shall also:

Inform their employees of the safe work methods to be adopted in their particular work including the use of standard PPE and additional PPE in line with Risk Assessment results;

Inform their employees of any special SHE rules for working near operating plant.

Inform their managers, supervisors and personnel of the “emergency procedures” so that they may provide the leadership and control required.

These training sessions shall be documented and sent to the Contractor SHE Manager/DSHEM. The SHEM/DSHEM will monitor subcontractors’ training activities to ensure that satisfactory standards are maintained.

Presentation and material to be used during the training, whenever possible should be in line with Delphi system presentations.

11.2.12. As-Built Report

CONTRACTOR shall prepare a Safety, Health and Environmental (SHE) As-Built Report and submit to PTTLNG/PMC for review and approval soon after the Construction Phase and prior to commissioning the overall facilities.

The SHE As-Built Report will include, as a minimum: a description of PROJECT environmental setting, SHE performance, statistics and KPI monitoring, SHE issues, incidents and aspects of construction by Phase, selected photographs (pre-construction, construction, and post-construction) showing activity, and any permits, approvals and documentation issued during the construction phases.

- **Deliverable:** SHE AS BUILT REPORT doc n. 122018-SPCC-C-SH-RPT-0006

This document is the property of SPCC who will safeguard its rights according to the civil and penal provisions of the Law.

11.3. SHE Meetings

The following SHE Meetings will be performed startig by Construction phase until the end of the Project.

- SHE Committee Meetings
- EIA Committee Meeting
- Weekly SHE Meetings;
- Weekly Workforce Tool Box Talks;
- Daily Job Specific SHE Talks;

11.3.1. SHE Committee Meeting

The Site SHE Committee, comprising CONTRACTOR, PTTLNG and Main SUBCONTRACTORs, will be established to jointly plan, control and monitor the SHE at the site.

The committee will be led by the CONTRACTOR Project Management.

The committee includes the following members at site:

- PTTLNG Representatives
- Project / Site Management
- SHE Manager
- Main SUBCONTRACTORs' Site Managers and SHE Manager

The major functions of the committee are as follows:

- Review the SHE Activities Planned & Implemented for effectiveness.
- Establish detailed, common Health, Safety, Security and Environmental activity targets and actions necessary to achieve those targets.
- Plan and conduct site SHE events and activities for the motivation and awareness of all employees.
- Review SHE performance and statistics of all participants. Evaluate the causes and consequences of poor performance. Make public the results to all personnel.
- Disseminate information on all Site incidents involving Health, Safety and Environment, and near misses, including any root cause analysis performed, actions taken, and lessons learned (i.e. incident reporting).
- Study necessary measures for improvement.
- Identify hazardous activities and co-ordinate necessary measures among the parties involved in the work.
- Identify items to be monitored
- Conduct safety patrols to audit and inspect all areas.
- Review and issue the results of audits and inspections and discuss necessary measures for improvement.
- Discuss safety orientation and training.

This document is the property of SPCC who will safeguard its rights according to the civil and penal provisions of the Law.

- At least once per year, review the adequacy of the Project SHE objectives and target and the suitability and effectiveness of the SHE MS.

The Safety Committee will generally meet monthly or more frequently if needed with, as reference, the following standard agenda:

- Review of previous minutes of meetings;
- Review of results of joint inspections and actions taken;
- High risk activities;
- Current activities and problems;
- Accident review and corrective actions taken;
- Future activities.

For compliance to THAI Law and the EIA:

- SPCC shall act to comply with the Thai law for the SHE Committee in the CHAPTER-2, CLAUSE 23 of the Ministerial Regulation on the prescribing of standard for Administration and Management of Occupational Safety, Health and Environment B.E. 2549.
  Minute of SHE Committee Monthly Meeting (MoM) shall be submitted together with the Safety professional report to the Labour Dept on every quarterly.

  EIA monthly Committee meeting shall take place as specified into the approved EIA, it consist of representative from Communities, Government agencies, it's organized by PTTLNG, however the Chairman will be appointed from EIA Committee the and supported for the organization by CONTRACTOR and EIA's SUBCONTRACTOR.

11.3.2. Weekly SHE Meeting

During this meeting, CONTRACTOR and SUBCONTRACTOR SHE depts. will plan and monitor the progress of the SHE activities implemented at site.

The presence of the site management could be requested depending the activities to be discussed.

The meeting will be commonly conducted once a week and minutes of the meetings distributed to the attendees, and CONTRACTOR and SUBCONTRACTOR site management.

Every SUBCONTRACTOR establishes a weekly Safety report to be delivered during the SHE weekly meetings, such report contains at minimum the following past week information:

- Worked hours
- Number of Lost Time Injuries - LTI
- Number of Restricted Work Cases - RWC
- Number of Medical Treatment Cases - MTC
- Number of First Aid Cases - FAC
- Number of Near Misses - NM

This document is the property of SPCC who will safeguard its rights according to the civil and penal provisions of the Law.

- Number of SHE inspections, audits
- Number of Safety Hazards & Observations Cards (SHOC)
- Number of SHE induction performed
- Number of Tool Box Meetings
- All information about significant events which occurred during the week.

The weekly Safety reports will be consolidated every month into the monthly Safety report, which will be communicated according to a distribution list established for the project.

Subcontractors are required to submit to DSHE Manager the safety statistics as per ANNEX 1 by 1st day of each month and provide update on weekly base.

In the weekly SHE meeting it will be also updated the status of follow-up actions and will be provide co-operation and all requested information to assist in the investigation and preventive action of any accident or incident.

All statistical data continuously captured along the project are monitored and analysed by the various SHE committees and compared to the targets. These reviews can lead to preventive or corrective actions in order to improve adequacy or efficiency of the SHE organization, system and effective prevention.

11.3.3. Weekly Workforce Tool Box Talks (TBT)

The weekly Workforce Tool Box Talk meeting will be addressed to the whole workforce with the aim to discuss general safety matters potentially affecting the whole work group.

TBT should not exceed 15 minutes, and will be held at the beginning of the week prior to dispersing the workforce into smaller crews to commence work.

CONTRACTOR and Sub-CONTRACTORs Construction Superintendents/Supervisors/Foremen shall attend the Tool-Box Talk.

11.3.4. Daily Job Specific SHE Tool Box Talks

A pre-job specific meeting is the final review stage led by the foremen (if any, supported by SHE personnel) prior to the actual start of each crews daily work activity.

This meeting is held at the work face, and provides a good opportunity to make a last minute review of the safety procedures for the work to be performed.

The meeting will be conducted at least daily, and in any case, before each shift begin.

Based on the JSEA analysis previously performed, High-risk work phases and potential hazards can be highlighted and discussed to make sure everyone has a clear understanding of the precautions required and the role each person plays in performing the task safely.

Other personnel (middle management or supervision personnel) could attend the meeting, if required.

A written record will be maintained summarizing the main points of discussion.

This document is the property of SPCC who will safeguard its rights according to the civil and penal provisions of the Law.

11.3.5. PROJECT MEETING RECAP TABLE

KOM With SUBCONTRACTORs	Prior to commencement of the works by the SUBCONTRACTOR, a kick-off meeting is carried out between CONTRACTOR, Partner and each of the SUBCONTRACTORs. Team members are Construction Project Manager, Construction Manager and SHE Management of each party and other Management representatives. One of the objectives of the kick-off meeting is to present : • Safety expectations and the specific SHE requirements of the Project • Site safety rules (including discipline) • Organizational requirements (meetings, audits/inspections, notifications, etc.)
Quarterly upon Site opening PMT Meeting	PTTLNG, CONTRACTOR and SUBCONTRACTOR Project Managers conduct a Site visit and then meet to discuss the main following issues: • Communicate to personnel stimulating but reachable objectives • Promote SHE culture and behavior • Create and evaluate the efficiency of the SHE organization in place • Review the global efficiency and the SUBCONTRACTOR's performances and encourage proactive indicator development • Share feedback and lessons learned sharing amongst the different parts of the Project.
Site SHE Monthly Meeting	**Management Committee with PTTLNG and SUBCONTRACTORs**: CONTRACTOR Site SHE Manager sets one meeting per month with SHE representatives. These site-based SHE meetings shall be utilized to: • Review and discuss SHE performance and accomplishments for the previous period and activities planned for the upcoming period. • Provide a forum for PTTLNG feedback regarding the performance and expectations of CONTRACTOR SHE performance. • At every meeting, SUBCONTRACTORs' management representatives at the work location shall be invited and shall present their SHE performance and accomplishments for the previous period and activities planned for the upcoming period.
Weekly Site SHE Meeting	CONTRACTOR (Site Manager, Construction Manager, SHE Mgr.), SUBCONTRACTORs (local Manager, senior SHE supervisors) and PTTLNG (Construction Manager, SHE Manager) are discussing the following items: • SHE program • Two weeks activities look ahead prior to their commencement • The good understanding of SHE principles by the entire workforce

This document is the property of SPCC who will safeguard its rights according to the civil and penal provisions of the Law.

	• The progress of the SHE culture and feedback from the personnel • Current SHE issues and events • Potential hazards, Near Misses, Incidents and related actions to be taken
Tool Box Meetings or Tool Box Talks (TBT) (1)	**1) Weekly TBTs** : work site conducts weekly Tool Box Meetings (often referred as Tool Box Talks) with employees and their immediate supervisor/foreman to discuss the following issues: • Review of actions items from the previous meeting • Incidents and near misses occurred during the period; remedial action taken • Problems employees may be experiencing in execution of a given task • New activities planned for the coming week • Review of any JSEA applicable to any task performed on regular basis • Supervisors and foremen have the opportunity through this meeting to issue recognition awards to meriting employees • Specific prevention topic, for instance: Manual handling, lifting, electricity, Work at Height.
	2) Pre-Job Meeting :The supervisor conducts the Pre-Job Meeting with his crew prior to starting the day or shift activity and uses the following broad format : Review previous day's safety effort and outcome by asking questions: • "How did we do yesterday?", "were there any incidents?" • "Was the correct equipment available to allow the work to proceed safely?" • "Did the equipment operate correctly?" • "Did the work progress as planned?" • "What brought about any changes to the plan?" • Briefly overview today's tasks, focusing on what safety hazards may be faced. • Discuss in detail, the foreseen hazards and the planned control measures for these hazards – refer to Pre-job checklist and get employee input and involvement. • Finish the meeting with a positive and encouraging comment. Employees are encouraged to make comments and suggestions. • Prior to starting a new job, simultaneous operations, or hazardous operations , or all non–routine , or any work requiring a PTW a pre-job meeting is conducted with all personnel present involved in the operations.

This document is the property of SPCC who will safeguard its rights according to the civil and penal provisions of the Law.

11.3.6. Other Meetings

If necessary, under CONTRACTOR evaluation, other Meeting could be held in order to assure the correct disclosure of all the SHE aspect or issue and the proper coordination of the activities.

11.3.7. PTW Coordination Meeting.

According to the provisions of the PTW System procedure, as described in the specific SHE Construction Manual, a relevant PTW Coordination Meeting will be held.

11.4. Permit To Work System

In the areas directly impacted by *Construction, Pre-Commissioning and Commissioning* activities, CONTRACTOR will use *his own PTW system.*

The CONTRACTORs' Permit to Work System is designed to ensure that a safe environment is achieved by providing management control over the various work activities which may be potentially hazardous.

CONTRACTOR Permit to Work procedure will be issued by CONTRACTOR prior to work inside the Construction fenced areas.

More details will be given in the 122018-SPCC-C-SH-PMT-0012 Work Permit Program

Important note

The above indicated doc n. 122018-SPCC-C-SH-PMT-0012 Work Permit Program shall be valid until the introduction of hydrocarbon.

CONTRACTOR shall take special precautions as work changes from construction through to PERFORMANCE ACCEPTANCE and take account of the additional risks posed by hydrocarbons being introduced into TERMINAL. This shall include enhanced site induction SHE meetings, "permit to work" system, control of personnel, segregation of areas, and emergency response. CONTRACTOR shall update all relevant procedures and work practices and carry out SHE reviews to reflect the change in working stage. This shall include the stages following construction and pre-commissioning and commissioning.

One (1) month before the date that hydrocarbon is introduced, CONTRACTOR shall submit its work permit system to PTTLNG/PMC for review and approval.

In all cases, conditions stipulated in the permit must be strictly adhered to. Permits to Work can be withdrawn anytime if it is so proved that conditions stipulated are not adhered to. CONTRACTOR shall ensure a sufficient supply of safety equipment as required by Permit to Work. In any case, where work conditions deviate from those specified or intended, or when the danger signal or fire siren sounds or a clearly unsafe condition exists, e.g. a distinct smell of gas leak, etc., all WORK

This document is the property of SPCC who will safeguard its rights according to the civil and penal provisions of the Law.

must be stopped until safe conditions are again assured and permits re-issued. In these instances, CONTRACTOR may be required to evacuate its personnel and equipment.

More details will be given in the 122018-SPCC-C-SH-PMT-0002 Permit to Work Program for Commissioning and SU.

This document is the property of SPCC who will safeguard its rights according to the civil and penal provisions of the Law.

11.5. SHE Initiatives And Communication Means

11.5.1. SHE Alerts/Bulletins

In order to share SHE awareness and information with the entire Site Team, SHE Alerts/Bulletins will be occasionally spread out, also by mean of mailing list, on topics related to the Project (e.g. Accidents and Near Miss, new SHE procedures issued, etc.) or related to other Sites/Projects.

11.5.2. Notice Board

SHE Notice Board made available at Site in order to assure proper communication and awareness for those people that don't have access to the mail service.

The Notice Board will contain information regarding SHE Policy, Emergency Numbers, Training Program, SHE Services, SHE Alerts, etc.

11.5.3. SHE Incentive / Discipline Scheme

CONTRACTOR will establish both a disciplinary and safety incentives program to curb unsafe or hazardous acts and behaviors and reward safe and team oriented PROJECT personnel. Further details within SHE procedure doc. N. 122018-SPCC-C-SH-PR-0002, moreover it's established and communicated to the PROJECT personnel during induction and when possible to the SUBCONTRACTORs at Kick-Off Meeting.

SHE incentives schemes or challenges are implemented to motivate all workforce including SUBCONTRACTORs to work safely and in an environmentally friendly manner, and to raise the SHE awareness of the workforce.
Personnel receive awards based on their personal leadership on safety or on best Safety Hazard Observation Cards issued.

In addition, incentive schemes are developed to encourage the SHE awareness of the workforce and foster open incident and near-misses reporting. This Incentive scheme, along with a transparent and fair disciplinary procedure, improves the SHE culture of the workforce.

The incentive program can include the implementation of a suggestion system to allow personnel to offer a safety suggestion, identify an issue or concern, or recognize a co-worker. The suggestion forms are turned to the site SHE Manager for review, prioritization, and capture. Action items resulting from forms are logged, tracked to resolution, and communicated back to

11.5.4. PROJECT PENALTY REQUIREMENTS

The Project operates under a "Just Culture" which places individual accountability on employee's actions by defining the lifesaving safety rules and general project safety culture which must be respected by all.

As examples, the following behaviors will be cause for disciplinary/penalty action:

- Violation to the Life Saving Rules

This document is the property of SPCC who will safeguard its rights according to the civil and penal provisions of the Law.

- Performing work under the influence of drugs or alcohol and/or possession of alcohol and drugs.
- Act of violence against people or willful damage to equipment/property.
- Violation of the Safety road transportation Law and Code
- Violation of speed limit at site
- Disregard towards the safety of PTTLNG or fellow workers.
- Significant economic harm to the Project.
- Failure to report incidents or risk exposures.
- Smoking in a non-smoking area.
- Violation to SHE rules.
- Horseplay or practical jokes.
- Failure to wear the correct PPE, improper use of safety equipment.
- Failure to comply with PTW, safety procedures/instructions, qualifications.
- Gambling, hunting, fishing.
- Other unacceptable acts or behaviors may be prohibited to reflect cultural values of local communities and Thai society in general.

11.5.5. SAFETY INCENTIVES PROGRAMS

SHE incentives schemes or challenges are implemented to motivate all workforce including SUBCONTRACTORs to work safely and in an environmentally friendly manner, and to raise the SHE awareness of the workforce.

Personnel receive awards based on their personal leadership on safety or on best Safety Hazard Observation Cards issued.

In addition, incentive schemes are developed to encourage the SHE awareness of the workforce and foster open incident and near-misses reporting. This Incentive scheme, along with a transparent and fair disciplinary procedure, improves the SHE culture of the workforce.

The incentive program can include the implementation of a suggestion system to allow personnel to offer a safety suggestion, identify an issue or concern, or recognize a co-worker. The suggestion forms are turned to the site SHE Manager for review, prioritization, and capture. Action items resulting from forms are logged, tracked to resolution, and communicated back to the workforce.

PTTLNG/PMC may elect to participate in such program.

Recognition programs provide a structured means to periodically reward (typically on 3 monthly base) and recognize those personnel who have contributed in making the worksite safer.

Working safely is seen as a condition of employment, therefore awards will not be directly linked to the expected safety behavior.

All personnel are encouraged to actively take part in the schemes.

The Safety Awards distributions are organized weekly or monthly and are based on merit, active participation, and the achievement of pro-active safety performance targets; such as:

This document is the property of SPCC who will safeguard its rights according to the civil and penal provisions of the Law.

- Near Miss/ Safety Observation Unsafe Act/ Condition Reporting
- Safety Initiatives/ Suggestions
- Displaying safety consideration to fellow workers

The rules and criteria defining this scheme are described in the “Project Safety Award Procedure” to be issued after contact award.

Project works closely with CONTRACTOR (and PTTLNG if applicable) to choose the most appropriate safety awards.

The awards are presented in presence of the PTTLNG/PMC and CONTRACTOR Site Representatives.

Please refer to the SHE Procedures Doc 122018-SPCC-C-SH-PR-0002

This document is the property of SPCC who will safeguard its rights according to the civil and penal provisions of the Law.

11.1. SHE Inspections and Audits

11.1.1. General

Scope of this activity is to verify, during the whole PROJECT life-cycle, the correct implementation of the SHE Management System and to evaluate the overall PROJECT SHE performance, for which the PROJECT Director (PD), Site Manager (SM) and SHE Manger (SHEM) are responsible.
The SHEM will assist the auditors in their activities and help manage possible recommendations in order to properly address them.
Audit results will be documented in dedicated Audit reports and shall include good points, corrective action requests and recommendations, and shall be reported to CONTRACTOR Management in a timely manner.
Corrective actions shall be implemented and their effectiveness verified.
During the audit, the CONTRACTOR monitors the compliance of the PROJECT activities, carried out by CONTRACTOR itself, by SUBCONTRACTORs and/or Vendors, with: Weekly Management Safety Walks.
At least once a week, a site inspection tour will be conducted by the CONTRACTOR and SUBCONTRACTOR Site Management, SHE and Construction representatives, in order to identify and ensure the accomplishment of the necessary organizational measures necessary to solve any SHE issue that has not been solved by the lower supervision levels.
At the end of the inspection a briefing will be conducted among the participants in order to agree an action plan and identify the necessary resources in order to solve the found issues.

11.1.2. SHE Inspections

The site SHE staff is entitled to perform SHE tours on a regular basis, to confirm compliance with safe methods of work. In these checks the SHE can also use checklists based on the risk assessment of each job.

The frequency will be evaluated and established by SHEM depending on the following factors:

- Size of the inspected area.
- Number of people working.
- Kind of activities carried out in the site.
- Skill and experience of the operatives.
- Frequency of accidents/incidents/near misses.

Anyway at least once a week, a site inspection tour (Safety Patrolling) will be conducted by the PTTLNG/PMC, CONTRACTOR and SUBCONTRACTOR Site Management, SHE and Construction representatives, in order to identify and ensure the accomplishment of the necessary organizational measures necessary to solve any SHE issue that has not been solved by the lower supervision levels.

At the end of the inspection a briefing will be conducted among the participants in order to agree an action plan and identify the necessary resources in order to solve the found issues, remedial actions to remove any dangers, and make working places safer, will be put in place by the relevant department/SUBCONTRACTOR..

This document is the property of SPCC who will safeguard its rights according to the civil and penal provisions of the Law.

Moreover the inspection is also an opportunity to share the actions taken and improvement achieved.

For the piece of Equipment inspection a specific register for each piece of equipment shall be used and the inspection must be provide by competent and trained Inspector once a month, after the inspection the inspector shall also put the sticker for the colour coding system.

Type # Frequency	Visit / Inspection Scope	Visit / Inspection team members
Management SHE Visits **# Yearly (minimum)**	Visit of any zone and observation of housekeeping status, visible equipment state, safety rules compliance for equipment and persons, work permit and environmental compliance. These visits give an occasion to communicate with work teams to show commitment and to check SHE awareness.	Visit conducted by the Line or Project /Site/ Vessel Mgr. + person responsible for the area (constr. Mgr., CONTRACTOR and SUBCONTRACTORs supervisors) + SHE rep.

The Management SHE visits are generally scheduled at short notice according to the travels of the Managers for the business on the site.

Type # Frequency	Visit / Inspection Scope	Visit / Inspection team members
Weekly Site Management Inspections (or safety patrolling or safety tours) (or walkthroughs) # Weekly (minimum)	Visit of work areas; interviews of supervisors and employees to assess the efficiency of communication; checking of a sampling of inspection and incident investigation reports; PPE compliance, etc. Recommended frequency = weekly	At least a PTTLNG/PMC member + area or discipline Mgr. + site SHE management. Occasionally members of the PMT when they are coming on the site.
Medical & Hygiene Inspections # Monthly	Inspection of Hygiene in social premises, catering facilities, accommodation, etc. Inspection of equipment and medicine available in clinics, ambulance, etc.	Site Medical Team
Equipment inspections # According to legislation & guidelines	Use of checklists specific to the different types of equipment: lifting, piling, diving, marine vessels, compressed air, marine vessels, vehicles, electrical installations and grounding, hand tools, working at height equipment, etc.	Supervisor or SHE competent for the type(s) of equipment to be checked together with the inspector qualified by Law
Supervision Team Inspection # Weekly	Inspection of the work areas, of the checklists completed; checking of equipment and materials; observation of employee behaviors, interviews to assess Toolbox and JSEA effectiveness; review of incident investigation reports; identification of	One site SHE team member + area supervisors (including SUBCONTRACTOR)

This document is the property of SPCC who will safeguard its rights according to the civil and penal provisions of the Law.

	anomalous situations	+ system leaders for CCA during Commissioning.
Environmental Inspections # Weekly	Inspection of all the site areas: effectiveness of the wastes sorting and storage ; application of dust control ; containments in place, pollution traces, seashore aspect, applicable EIA mitigation measure etc.	Environmental supervisor.
SHE daily inspection 1# During the day/shift	Inspection with checklists prepared by the Site SHE team about the main risks associated to the works in the area (s) inspected.	Site SHE team member(s).
2# End of day/shift	To ensure that all work areas are secure and at minimum: ▪ All equipment is stopped and switched off, ▪ Collective protection equipment is in place, ▪ All personnel is off, ▪ The work areas are left clean and in order.	SHE Supervisor or Officer of each SUBCONTRACTOR checks their own work area(s).

Inspection forms have been reported within the SHE Manual for Construction

11.1.3. SHE Audits

Based on a project Audit schedule, the CONTRACTOR SHE Department will conduct audits of the work site, management system and status of compliance with the essential elements of applicable SHE practices, regulatory requirements, trends, results of previous inspections, accident/incident management, review of corrective action trends and progress.

In particular, as reference, the specific objectives of the Project SHE Audit are to verify:

- Respect of Laws and regulations;
- Responsibilities;
- Risk evaluation and management;
- Respect of the environment;
- Safeguarding of health;
- Competence and training;
- Emergency preparedness;
- Incident investigations;
- Inspections;
- General site conditions of construction areas;
- Project SHE documentation applicability;
- CONTRACTOR SHE organization;
- Project SHE procedure implementation;
- Follow up of previous recommendations.

Auditing will be performed by personnel not directly involved in the activities, also within the CONTRACTOR Organization, with the use of standard and specific check-lists; audit reports will define needed corrective actions in function of non-conformity highlighted during the inspection of the site.

This document is the property of SPCC who will safeguard its rights according to the civil and penal provisions of the Law.

Deficiencies identified during the audit are reviewed and analysed to determine potential failures in the SHE Management System and to develop appropriate corrective actions.

Findings are discussed with site key personnel during a closing meeting.

Deficiencies are documented along with the corrective actions, responsibility for completion and targeted completion dates.

Ref procedure: 122018-SPCC-C-SH-PR-0013 SHE AUDIT Procedure

Type # Frequency	Audit Scope	Audit team members
CONTRACTOR SHE audits # Yearly (minimum)	Audit of worksite SHE-MS to check compliance with CONTRACTOR rules and standards	CONTRACTOR SHE Department auditors
Monthly EIA external Audit	As per Environmental Monitoring Plan, to ensure that compliance with environmental monitoring and mitigation measures as per EIA requirement	Third party (UAE)
Internal Project SHE-MS audit (*) # Yearly (minimum)	To assess the effectiveness of all the SHE activities and processes described in the Project SHE-MS. Can be split into 2 to 4 sub-audits looking at different processes (*) The audits are conducted at a minimum frequency of 1 / year, unless otherwise specified by the Project Manager, who can establish shorter intervals (for instance in case of an unsatisfactory performance).	Site Internal auditors
Medical Audits # Yearly (minimum)	Health Management system: to verify that the site is implementing and complying with the Health Plan	CONTRACTOR Medical Coordinator
Environmental management audits # Bi-annual (minimum)	Audit of the Environmental system: compliance with procedures / plans, effectiveness of the monitoring plans, of the environmental surveillance. Can be combined with the Internal Site SHE-MS audit	One construction team member + SHE Mgr. or DSHE Mgr.
OHSAS 18001 audit # Yearly (maximum)	In the context of the OHSAS 18001 each project is able to be chosen by the certification body for performing a SHE-MS audit	Third Party auditors
PTTLNG Audit & safety Assessment # PTTLNG's Audits	Different types of audits / inspections can be carried out by the PTTLNG.	PTTLNG's team generally assisted by the CONTRACTOR Site SHE Management.

This document is the property of SPCC who will safeguard its rights according to the civil and penal provisions of the Law.

11.2. INCIDENT Reporting, Investigation & Follow-Up

Serious incidents and injuries will be immediately reported to the CONTRACTOR Management and PTTLNG/PMC and immediately investigated.

CONTRACTOR will ensure that an immediate oral report is made to the PTTLNG/PMC Representative in the case of:

- fatal Injuries;
- injuries requiring medical attention, which may or may not result in lost time;
- damage, in any amount, to PTTLNG equipment or property.

It is the duty of CONTRACTOR's and SUBCONTRACTORs to notify the SHE Management at site of any accident or incident immediately.

For accidents involving fatalities, lost time injury, medical treatment case, restricted work case, or damage to PTTLNG equipment or property, a preliminary report will be submitted to PTTLNG/PMC representatives. After investigation a final report will be submitted as well.

CONTRACTOR shall report to PTTLNG/PMC immediately on the occurrence of any injury to its employees, or SUBCONTRACTOR employees, incident or damage to equipment or Terminal, including near misses within twenty-four (24) hours of the occurrence. A detailed written report of incident shall be presented to PTTLNG/PMC within the next working day, with proposed measures to avert such incidents or occurrences. Accident and incident management shall incorporate PTTLNG/PMC's Key Performance Indicators (KPIs) requirements.

CONTRACTOR will update in the weekly SHE meeting on the status of follow-up actions and will co-operate and provide all requested information to assist in the investigation and preventive action of any accident or incident.

Written reports will be prepared and submitted according to a specific CONTRACTOR procedure Incident Notification and Investigation doc n 122018-SPCC-C-SH-PR-0014

CONTRACTOR shall incorporate accident/incident records in SHE monthly report to PTTLNG/PMC.

Register and records of all incidents involving WORK shall be maintained to assess SHE working performance and the need to introduce additional controls.

11.3. SHE Performance and Reporting

SUBCONTRACTORS are required to update statistics every week during the Weekly safety Meeting in accordance to the annex 1.

On a monthly basis the CONTRACTOR SHE Team will prepare a report to be issued within the 3rd day of each month to PTTLG including safety statistics, details of any hazardous incidents and activities relating to environmental aspects and EIA requirement.

For details relevant to the Environmental reporting please refer to the Environmental Management Plan issued for the PROJECT doc n. 122018-SPCC-C-SH-PR-0031.

This document is the property of SPCC who will safeguard its rights according to the civil and penal provisions of the Law.

11.3.1. IMPLEMENTATION AND MONITORING

Safety Statistics record keeping and reports

The DSHEM collect all SUBCONTRACTORs "Monthly Safety Statistical Reports" analyze all the information and fill the same form in SHE Monthly Report considering the totality of man-hours and recordable cases during the month, complete and provide the SHE Monthly Feedback at the close of each month to the SM and to the SHE Head Office.

Project SHE reporting for EIA compliance

Each SUBCONTRACTOR SHE Manager shall complete and submit the "Monthly Safety Statistical Report" (Annex1 of the present Plan and the 122018-SPCC-C-SH-RPT-0037) to the DSHEM at site first day of each month.

Safety performance will be analyzed every month considering in the Monthly SHE report (122018-SPCC-C-SH-RPT-0037) the Indicators and the Pro-active indicators.

In case result are not satisfactory additional action will be required to improve the site conditions.

SUBCONTRACTOR requirements

SUBCONTRACTORs have responsibility for the SHE of their operations irrespective of whether carried out by themselves or others.

SUBCONTRACTORs shall either:

- issue and keep up to date their own SHE Construction Plan that shall be in compliance with this document. All SUBCONTRACTORs shall comply with the most stringent of this document and their SHE Construction Plan; or
- fully adopt and comply with the requirements of this SHE Plan for Construction as if their own and other way improve with comments;
- provide specific SHE procedures (work instructions) for the works using procedures in this plan and into the SHE Construction Manual (SHE procedures for Construction as reported associated with the SHE Manual for Construction). SUBCONTRACTORS must also complies to the SUBCONTRACTORS SHE Requirements 122018-SPCC-C-SH-PR-0020.

This document is the property of SPCC who will safeguard its rights according to the civil and penal provisions of the Law.

11.4. OTHER SHE Aspects

11.4.1. Management Of Work Interferences

In case multiple works shall be carried out in the same area and are in some way interfering, in order to minimize the risk following step, shall be followed:

- a coordination meeting shall be arranged, interferences shall be pointed out and eventual additional safety measures planned. In case there isn't any chance to reduce the additional risk consequent to the work interference, works shall be shifted;
- a Work Permit shall be issued;

Depending on the interference typology following solutions could be considered applicable:

- one work activity will be interrupted up to the other will be completed;
- area will be fenced and signaled, inside this space nobody will be authorized to carry out any other activity, as in case of the lifting activity;
- apply collective protection;
- safety distances shall be respected;

All Construction and SHE Supervision shall be made aware and trained concerning the correct management of the works interference and in case of highlighted issue the Construction shall appoint a Superintendent as SIMOPS Coordinator (Simultaneous Operation).

11.4.1.1 Simultaneous Operations (SIMOPS)

Contractor has noted that, at certain stages, the execution of Work may take place in areas shared with PTTLNG's personnel and other Contractors /Subcontractors.

Work shall be performed simultaneously and may result in a high concentration of manpower in particular area.

During these periods, particular attention shall be paid to SHE conditions, both within the areas of Site and at the interface with adjoining areas. In addition Contractor shall be required to liaise with neighbouring workforces at management level and agree on procedures to regulate Work where interaction or SIMOPS may take place.

The Project Management Team must be aware of all the activities managed at the same time on the site and therefore can identify and anticipate possible co-activities or simultaneous operations (SIMOPS). A particular attention is paid to possible co-activity between construction works and operations of a live installation or plant area.

The SHE Manager establishes with the SIMOP Coordinator a specific SIMOPS plan or procedure which is endorsed by the Construction Manager and the Commissioning Manager.

- Deliverable: Simultaneous Operations procedure doc n. 122018-SPCC-C-SH-PR-0015

11.4.2. Occupational Hygiene

This document is the property of SPCC who will safeguard its rights according to the civil and penal provisions of the Law.

CONTRACTOR and SUBCONTRACTORs will put in place work methods and procedures to monitor the status at least of the following Occupational hygiene issues:

- Handling of chemicals;
- Dust monitoring;
- Noise;
- Vibration;
- Hygiene;
- Thermal comfort.

Further details will be provided in the 122018-SPCC-C-SH-PR-0030 SHE Manual for Construction and into the approved EIA.

11.4.3. Alcohol And Drugs



CONTRACTOR is committed to making the working and living environments under its direct control healthy and safe. Such environments include all sites, structures, installations, vehicles and equipment owned, rented, leased or managed by CONTRACTOR.

In accordance with its SHE Policy, CONTRACTOR puts its greatest attention in protecting the health of its own employees and the safety of its own activities. Therefore the abuse of alcohol and drugs is absolutely prohibited in the premises of the Project. These abuses can result in damages to the health of a person, as well as to the properties of the PTTLNG whether it be a conscious or an unconscious act by the people concerned. In order to monitor the compliance with its policy of zero tolerance, CONTRACTOR carries out regular post-accident, based on reasonable suspicion, and critical activities D&A tests. The regular tests are part of the pre-employment and periodical fitness examinations, which each employee is due for on an annual basis, and aim to determine the presence of the following substances: Alcohol, Methamphetamine, Morphine, Cannabis, Amphetamine, Cocaine, and Benzodiazepine. Employees that reacted positive to any of these substances are not certified fit for work. The other tests will be conducted on all work sites if there is no discrepancy with the local legislation that treats this subject. In order to define the process of Drug & Alcohol testing on work sites, CONTRACTOR has developed a work instruction " alcohol and drug testing". This procedure is applicable to all work sites and to all employees, for High risks activities and random testing.

In order to ensure that all employees are aware of the health and disciplinary consequences of alcohol and drug use and abuse CONTRACTOR organizes information sessions aiming to enhance their knowledge on the issue. As part of its health promotion initiatives, CONTRACTOR also could develops and distributes leaflets with accurate, easy to understand, comprehensive information on the health effects of drug and alcohol use and abuse.

11.4.4. Smoking



Being aware of the enormous harmful potential of the habit of smoking, CONTRACTOR is committed to take all possible appropriate measures to induce decrease in smoking on the worksites, in order to maintain a good working and living environment and avoid discomfort, diseases or accidents caused by smoking. The approach methods are:

- organizing awareness campaigns
- discourage smoking by implementing no-smoking policy in all office areas
- placing signs wherever smoking is forbidden
- verifying whether they are obeyed.

This document is the property of SPCC who will safeguard its rights according to the civil and penal provisions of the Law.

11.4.5. Driving Risks



All CONTRACTOR and SUBCONTRACTOR personnel who intend to drive for the Project must hold an appropriate and valid driving license for the vehicles, plant or equipment to be driven.

Local driving rules will be strictly followed by anyone who drives vehicles; in addition Construction Site and Plant rules will be followed.

CONTRACTOR shall maintain and enhance the awareness of safe driving among its employees and SUBCONTRACTOR's employees and will provide vehicles in good operating condition.

Where applicable, CONTRACTOR must ensure that its employees, and the employees of SUBCONTRACTORs, receive adequate driving instruction and that visible steps are taken to maintain a safe standard of defensive driving.

- Vehicles shall be fit for the purpose, regularly inspected and well maintained in accordance with good driving practices.
- All seats of all vehicles must be equipped with seat belts at least 2 with a conversion for new vehicle equipped only of three fixed-point type.
- Vehicles with roofs, which cannot withstand a rollover, should be fitted with roll bars.
- Vehicles used for isolated areas shall be equipped with survival kits comprising a two-way radio, drinking water, first aid kit, etc.
- No unauthorized usage of transport shall be tolerated by CONTRACTOR or SUBCONTRACTOR staff. The nominated Work Safety and Health Officer(s) should ensure that all forms of transport are correctly fitted with the appropriate safety equipment.

CONTRACTOR and SUBCONTRACTORS shall undertake to ensure that all drivers comply with the following basic rules:

- Possess a valid driver license;
- Always wear a seat belt;
- Always observe traffic rules, especially speed limits;
- Never drive after consuming alcoholic drinks or certain medicines/drugs;
- Never drive when very tired;
- Take regular stops when driving long distances;
- Be sure that the vehicle is properly maintained and in good condition for the planned journey;
- Never overload the vehicle; and,
- Drive defensively.

CONTRACTOR and SUBCONTRACTOR must assure to have an:

1) Assessment completed on the experience for drivers, according to the type of vehicle they drive;

2) Two point safety belts are still accepted on buses and minivans, however, each new contract with passengers transportation companies and purchase contracts of passengers vehicles shall contain the requirement of three point safety belts on all seats.

This document is the property of SPCC who will safeguard its rights according to the civil and penal provisions of the Law.

The speed limit on all work sites 20 Km/h, in neighbored roads out of the site 30Km/h, in public roads less than 80Km/h as stated within the EIA, and populated areas should be announced and posted for passenger and material transport vehicles.

CONTRACTOR and SUBCONTRACTOR's driver couth by police on the public road violating traffic rules will be immediately dismissed by PROJECT; at site in violation of traffic rules, shall be punished with a project fine of 15000THB and if an incident will result from the violation the immediately dismissed by PROJECT.

11.4.6. Stop Work Authority. Unsafe Conditions & Acts

It is important to note that, as indicated in the SHE policy, CONTRACTOR, PTTLNG and SUBCONTRACTORS are entitled to stop any activity if it is believed to involve any hazard. This "Stop work authority" is granted to all project personnel.

Non-compliance with the requirements of the SHE Management Plan(s) shall be considered as misconduct for which PTTLNG or its Project Management Consultant (PMC) shall have the right to require CONTRACTOR to remove offending personnel from Site. In certain cases, PTTLNG/PMC may suspend work that is considered by PTTLNG/PMC as unsafe, until compliance with safety regulations has been re-established.

On the request of PTTLNG/PMC, any unsafe operation/practice by CONTRACTOR or its SUBCONTRACTOR shall be stopped immediately and rectified at CONTRACTOR or its SUBCONTRACTOR cost to the satisfaction of PTTLNG/PMC. For such suspension of Work, CONTRACTOR is not allowed to claim the delay of the planned schedule.

If, during the execution of Work, conditions at a particular location within Site are deemed unsafe by CONTRACTOR, he shall notify PTTLNG/PMC immediately.

PTTLNG/PMC shall be responsible for verifying that Site is safe before Work recommences.

11.4.7. LANGUAGES REQUIREMENTS

The language difficulties with the multinational workforce are identified and the worksite ensures information is provided in a manner that can be understood by all concerned. Worksite utilizes multiple meetings and multiple languages if required to assure effective communication with each audience.

- The PROJECT Language is English for PROJECT documents and all managers.
- Thai will be used where needed to communicate with workforce.
- In particular, safety booklets, jobsites signs & road signs, Permit to work forms will be bilingual in Thai & English.

This document is the property of SPCC who will safeguard its rights according to the civil and penal provisions of the Law.

Annex 1 – CONTRACTOR'S SAFETY REPORTING AND INDICATORS

This document is the property of SPCC who will safeguard its rights according to the civil and penal provisions of the Law.

CONTRACTOR INTERNAL - PRO ACTIVE INDICATORS

1 Rev: | 2 Date:

3 Pag 1/1

12. Month:
Year:

Company……..

4 Project / Site / ……..

Compiled by: | Date:

13. GENERAL SUMMARY **5 PRO-ACTIVE INDICATORS**	**14. Monthly total** (SPCC)	**15. Monthly total** (Subcontractor)	**16. Monthly total** (SPCC & Subcontractors)	**Total since the beginning of Project / year *** (SPCC)	**Total since the beginning of Project / year *** (Subcontractor)	**Total since the beginning of Project / year *** (SPCC & Subcontractor)
No. of ***SHE Training Hours***						
No. of ***Senior management SHE Visits***						
No. of ***Toolbox Talks***						
No. of ***Job Safety Environmental Analysis***						
No. of ***SHE Meetings***						
No. of ***SHE Inspections***						
No.of ***Safety/Hazard Observation Cards***						

NOTE:	Deputy SHE Manager ……..	Site Manager ……..

This document is the property of SPCC who will safeguard its rights according to the civil and penal provisions of the Law.

CONTRACTOR INTERNAL SAFETY INDICATORS

Pag 1/1

17. Month:
Year:

Company……..
Project / Site / ……

Compiled by:

Date:

18. GENERAL SUMMARY **19. SAFETY INDICATORS**	**20. Monthly total** (SPCC)	**21. Monthly total** (Subcontractor)	**22. Monthly total** (SPCC & Subcontractor)	**Total since the beginning of Project / year°** (SPCC)	**Total since the beginning of Project / year°** (Subcontractor)	**Total since the beginning of Project / year°** (SPCC & Subcontractor)
Average Manpower						
Total Worked Manhours						
No. of ***Fatal Accidents***						
No. of ***Lost Time Injuries***						
No. of ***Work Restricted Cases***						
No. of ***Medical Treatment Cases***						
No. of ***First Aid Cases***						
No. of ***Commuting Injuries***						
No. of ***Near Miss***						
No. of ***Lost Workdays***						
No. of ***Restricted Workdays***						
No. of ***Road Traffic Accident (RTA)***						
Km Driven						

This document is the property of SPCC who will safeguard its rights according to the civil and penal provisions of the Law.

Lost Time Injury Frequency Rate (LTIFR)						
Total Recordable Frequency Rate (TRFR)						
Severity Rate (SR)						

NOTE:	Deputy SHE Manager ……..	Site Manager ……..

This document is the property of SPCC who will safeguard its rights according to the civil and penal provisions of the Law.

PTTLNG Nong Fab LNG Receiving Terminal Project

SHE PROCEDURES

Doc. Class Z2

[redacted]

REV.	STATUS	DATE	REVISION DESCRIPTION	BY	CHK.	APPR.

This document is the property of SPCC who will safeguard its rights according to the civil and penal provisions of the Law.

Revision list:

Rev. Nr	Modifications:
R1	First Issue
R2	Issue for comment from client
F1	Issue for Final implementing comments from client and arranged according to the approved Project SHE Plan for construction
F2	Issue after SPCC internal review
F3	Issued after revised methodology for definition of safety zone during pneumatic pressure testing- SHE Procedures (Pneumatic Test) - page 242

This document is the property of SPCC who will safeguard its rights according to the civil and penal provisions of the Law.

TABLE OF CONTENTS

1 GENERAL 5
2 PROJECT SHE & SECURITY PLAN 5
3 REFERENCES 6
4 LANGUAGE 8
5 HAZID OF CONTRUCTIONS CRITICAL ACTIVITIES 9
6 PERMIT TO WORK SYSTEM (PTW) 10
7 JOB SAFETY AND ENVIRONMENT ANALYSIS; JSEA 10
8 SAFETY TASK ASSIGNMENT 11
9 INSTRUCTION – ORIENTATION, TRAINING AND SAFETY MEETINGS 11
10 SHE COMMUNICATIONS 13
11 RECORDKEEPING OF INCIDENTS AND TRAINING 13
12 DRUGS AND ALCOHOL POLICY 14
13 SHE INSPECTIONS 15
14 FIRE PROTECTION/PREVENTION 16
15 FIRE PROTECTION/HOT WORK (WELDING, CUTTING, BURNING, ETC.) 17
16 THIRD PARTY SHE INSPECTIONS 18
17 CONSTRUCTION EMERGENCY PREPAREDNESS PLAN AND DRILLS 18
18 CRANES AND DERRICKS 18
19 EQUIPMENT AND MOTOR VEHICLES 18
20 ELECTRICAL 19
21 LIGHTENING PROTECTION 19
22 FLOOR AND WALL OPENINGS AND STAIRWAYS 20
23 LADDERS 20
24 EXCAVATIONS AND TRENCHING 21
25 STEEL ERECTION 22
26 CONFINED AREAS OR SPACES 22
27 SANITATION 23

This document is the property of SPCC who will safeguard its rights according to the civil and penal provisions of the Law.

28 LUNCH / BREAK AREAS 24
29 HEAT STRESS 24
30 SMOKING 24
31 IONIZING RADIATION 25
32 HEXAVALENT CHROMIUM 26
33 PAINTING AND BLASTING 26
34 LIVE LINES 27
35 PERSONAL PROTECTIVE EQUIPMENT 27
36 SIGNS, SIGNALS, BARRICADES AND LIGHTS 28
37 RIGGING EQUIPMENT 29
38 POWER TOOLS AND HAND TOOLS 29
39 COMPRESSED GAS CYLINDERS 30
40 SCAFFOLDS 30
41 TEMPORARY PIPE SUPPORTS 31
42 EQUIPMENT PRESERVATION 31
43 MONTHLY INSPECTION PROGRAM 31
44 DRIVING & TRANSPORTATION 32
45 OCCUPATIONAL HEALTH 33
46 FIRST AID AND INJURY REPORTING REQUIREMENTS 33
47 SHE PENALTIES 35
48 REQUEST REMOVAL OF CONTRACTOR PERSONNEL 36
49 SECURITY 36
50 PROTECTION OF WORKERS, THE PUBLIC, ASSETS AND ENVIRONMENT 37
51 ATTACHMENT 37

This document is the property of SPCC who will safeguard its rights according to the civil and penal provisions of the Law.

1 GENERAL

The purpose of this Procedure is to outline, describe and define the requirements for SPCC, as per PTTLNG Health, Safety, Security and Environmental (SHE) management program and it's SHE & security policies to meet throughout the execution of the PROJECT.

The purpose of these safety and health requirements is to ensure compliance to regulatory requirements and to prevent incidents or events that could result in fatality, injury or illness to personnel and/or damage to environment or property.

SPCC (JV Saipem & CTCI) shall comply with all the applicable Health, Safety and Environment ("SHE")LAWS and PERMITS pertaining to safety, health, environmental protection and fire protection, which are applicable to the location, where the WORKS are being carried out.

SPCC will also comply at all times with the requirements, as set forth by the PTTLNG in its Safety, Health and Environment Management System ("SHE MS"), policies, operating standards, WORKSITE SHE requirements, and any special instructions and all requirements stipulated in this CONTRACT.

These requirements are intended to supplement any safety and health requirements imposed by LAW with which the SPCC is obliged to comply. SPCC will also adhere to any safety and health procedures as may be imposed by PTTLNG.

2 PROJECT SHE & SECURITY PLAN

PROJECT SHE & SECURITY PLAN which has to be submitted to PTTLNG for approval within thirty days (30) days after COMMENCEMENT DATE and in any case prior to the commencement of any SPCC's activities on the WORKSITE. This document will be an umbrella' document which will need to be supported by other SHE procedures.
SPCC will implement and maintain its own SHE procedures, work instructions and guidelines during the construction aspects of the WORKS.
The PROJECT SHE PLAN will be agreed with PTTLNG prior to its implementation and will be subject to periodic audit by PTTLNG. It needs to refer, as a minimum, but not limited, to the following elements of SHE management:

- ✓ Leadership and commitment;
- ✓ Policy and strategic objective;
- ✓ Organization, responsibilities, resources, standards and documents;
- ✓ Health management;
- ✓ Environment management;
- ✓ Safety & transportation management;
- ✓ SHE risk management / reviews;
- ✓ SHE training and familiarization;
- ✓ Prevailing LAWS and regulations;
- ✓ Planning and procedure;
- ✓ SHE management of Subcontractor;
- ✓ Process safety, safe operations, asset integrity;
- ✓ Management of change;
- ✓ Competence assurance;
- ✓ Incident management and emergency response;

This document is the property of SPCC who will safeguard its rights according to the civil and penal provisions of the Law.

- ✓ Implementation and monitoring;
- ✓ Management review.

SPCC will need to develop a number of security & emergency response procedures, work instructions and guidelines in order to ensure the security and crisis management of the worksite.

3 REFERENCES

A. CONTRACTUAL

Applicable SHE documents of PTTLNG:

PTTLNG'S References	Doc. N°
1602088-32016-CV-TS-003-F0	Specification for Drainage System
1602088-32016-GE-005-F0	PROJECT Reference Codes and Standards
1602088-32016-MG-TS-004-F0	Specification for Acoustical Insulation
1602088-32016-PM-GE-001-F4	PROJECT Procedures and Administrative Requirements (General PROJECT Requirement) Section 9. SHE
1602088-32016-PM-GE-008-F0	List of Documents to be Submitted During Detail Design for Each Discipline. Appendix F. Section 1.5 SHE
1602088-32016-PM-GE-015-F0	Site Safety and Security Procedure (Template)
1602088-32016-PM-GE-019-F0	Change Procedure
1602088-32016-PM-GE-028-F0	Environmental Impact Assessment (EIA). Appendix E-1
1602088-32016-PM-RPT-103-F0	PTT Environmental Management Plan
1602088-32016-PM-RPT-104-F0	PTT Personnel Protection
1602088-32016-PM-RPT-105-F0	PTT Environmental Specification
1602088-32016-PM-RPT-106-F1	PTT HSE Legislation
1602088-32016-PM-RPT-109-F1	PTT Corporate Worksite Health, Safety & Security
1602088-32016-PM-RPT-110-F0	PTT Corporate SH&E Pre-Qualification Expectations
1602088-32016-PM-RPT-111-F0	PTT Corporate Work Site Environmental Requirements
1602088-32016-PM-RPT-113-F0	PTT Safety and Health Management Plan

B. INTERNATIONAL CODES AND THAI LEGISLATION AND STANDARDS

International treaties
United Nations Conference on the Law of the Sea
Environmental, Health, And Safety Guidelines Liquefied Natural GAS Facilities – IFC - WB
Vienna Convention for the Protection of the Ozone Layer, including the Montreal Protocol and the London Amendment
Convention Concerning the Protection of the World Cultural and Natural Heritage or World Heritage Convention

This document is the property of SPCC who will safeguard its rights according to the civil and penal provisions of the Law.

Basel Convention on the Control of Transboundary Movements of Hazardous Wastes and their Disposal
Occupational Safety and Health Administration - OSHA

Thailand national Laws

Notification of Industry Industrial Effluent Standard B. E. 2560
National Environmental Quality Act BE 2535 (NEQA 1992)
Ministerial Regulation on the Prescribing of Standard for Administration and Management of Occupational Safety, Health and Environment in relation to Hazardous Chemicals, B.E. 2556 (A.D. 2013), Fire Prevention and Control, B.E. 2555 (A.D. 2012), Machines.
Ministerial Regulation on the prescribing of Standard for Administration and Management of Occupational Safety, Health and Environment B.E. 2552 (A.D. 2009)
Safety, Occupational Hygiene and Workplace Environment Act B.E. 2554 (2011) Ministerial Order No. 123/2555 re: Appointment of OSH inspectors to under the OSH Act 2011.
Notification of the Ministry of Labor concerning Specific Health Check-up for Employees Performing Works in relation to Chemical Risk Factors, B.E. 2552 (A.D. 2009)
Ministerial Regulation on the Standard for Administration and Management of Safety, Occupational Health and Working Environment in Relation to Construction work year/ 2009
Labor Announcement Regarding safety signs and safety symbol /year 2011
Labor Announcement Regarding PPE Standards / year 2011
Labor Announcement Regarding yearly equipment inspection / year 2011
Ministerial Regulation Regarding building control / year 2009
Law Ministerial Regulation on the prescribing of Standard for Administration and Management of Occupational Safety, Health and Environment B.E. 2549 (A.D.2006)
Ministerial Regulation, issued under the Factory Act
Factory Act BE 2535 (1992)
Public Health Act BE 2535 (1992)
Hazardous Substances Act BE 2535 (1992)
Oil Fuel Storage Act BE 2542 (1999)
LPG Storage Act BE 2538-2450 (1995 - 1997)
Fire Protection & Prevention Act BE 2542 (1999)
Building Control Act BE 2522 - 1979/ Building Control Act No. 2 BE 2535 - 1992 and Associated Ministerial Regulations.
Protective Measures for Operational Safety, Notification of Ministry of Industry No. 3 (BE 2542 - 1999) issued under the Factory Act.
Safety Standards for Chemicals by Department of labor based on ACGIH standards
Occupational Noise Levels. Ministry of Industry Notifications (Document No.4, 1971)
Occupational Noise Levels. Ministry of Interior Notification (1976).
Lighting levels: Safety Standards for Lighting Labor Standard of the Ministry of Interior (1977).
Announcement of the Ministry of Industry on Requirement for Installation of Special Tools or Instruments in Various Types of Factories for Automatic Air Quality Monitoring/Inspection from its Chimneys (BE 2544),
The Industrial Estate Authority of Thailand Port Regulations 1997 Concerning Port.
Affairs on Services, Facilities, Safety Control, Environmental Protection and Related Activities
Notification of MSTE (Ministry of Science, Technology and Environment) Ref EPA.
Standard for Determination of NOx, SOx and Particulate Emissions from Stationary Sources of Flue Gas dated 25/12/95.
Energy Conservation Promotion Act BE 2535 (1992).
The Industrial Estate Authority of Thailand (IEAT) and Eastern Fluid Transport (EFT) Regulations in respect to the issue of permits and the associated health, safety and environment requirements.
Affairs on Services, Facilities, Safety Control, Environmental Protection and Related Activities

This document is the property of SPCC who will safeguard its rights according to the civil and penal provisions of the Law.

Notification of MSTE (Ministry of Science, Technology and Environment) Ref EPA.
Standard for Determination of NOx, SOx and Particulate Emissions from Stationary Sources of Flue Gas dated 25/12/95.
Energy Conservation Promotion Act BE 2535 (1992).
The Industrial Estate Authority of Thailand (IEAT) and Eastern Fluid Transport (EFT) Regulations in respect to the issue of permits and the associated health, safety and environment requirements.

This document is the property of SPCC who will safeguard its rights according to the civil and penal provisions of the Law.

Energy Conservation Promotion Act BE 2535 (1992).
The Industrial Estate Authority of Thailand (IEAT) and Eastern Fluid Transport (EFT) Regulations in respect to the issue of permits and the associated health, safety and environment requirements.
Affairs on Services, Facilities, Safety Control, Environmental Protection and Related Activities Notification of MSTE (Ministry of Science, Technology and Environment) Ref EPA.
Standard for Determination of NOx, SOx and Particulate Emissions from Stationary Sources of Flue Gas dated 25/12/95.
Energy Conservation Promotion Act BE 2535 (1992).
The Industrial Estate Authority of Thailand (IEAT) and Eastern Fluid Transport (EFT) Regulations in respect to the issue of permits and the associated health, safety and environment requirements.

4 LANGUAGE

SPCC will develop procedures and instructions to ensure effective communications are in place to deal with any multi-lingual personnel employed at WORKSITE who do not understand and/or cannot communicate in English languages. SPCC will identify to PTTLNG its strategy for meeting these multi-lingual needs sufficiently in advance of commencement of the WORKS at the WORKSITE

C. General Obligations

a. SPCC will provide to PTTLNG a copy of all reports made to government agencies or insurance companies relating to any Worksite accident, injury, or incident during SPCC's performance of the Work.

b. Any Worksite-specific SHE requirement, which exceeds the minimum standards established by regulation, shall be incorporated into SPCC's SHE program/procedures.

c. SPCC will attend a preconstruction meeting with PTTLNG to understand the project conditions and SHE requirements prior to starting Work at the Worksite. A Worksite tour shall be made to facilitate SPCC's awareness and understanding of potential hazards.

d. Appropriate methods, equipment, devices, and material shall be provided by SPCC to ensure a safe workplace.

e. SPCC's SHE Representative has the responsibility to translate site-or contract-specific activities and requirements into specific plans and procedures that provide direction for ensuring environmental protection requirements are met. This documentation shall identify, for each area of concern, specific actions that shall be taken and responsibility for their implementation. Actions shall be based on regulatory or other requirements tailored to the project and contract scope of Work and technical requirements. Required SHE documentation shall be developed and implemented prior to commencement of affected activities.

This document is the property of SPCC who will safeguard its rights according to the civil and penal provisions of the Law.

D. Hazardous Substances

a. SPCC will be responsible for immediately notifying PTTLNG in writing of any hazardous chemicals or substances that are brought on Worksite or cause to have been brought on Worksite. SPCC shall provide PTTLNG with a copy of SPCC's Hazardous Material and Communication Program and the Safety Data Sheet(s) (SDS [or equal]) for the chemical(s) or substance(s) intended for use on the Worksite. SPCC shall be responsible for keeping this information current. SPCC shall be responsible for maintaining a copy of SPCC's Hazard Communication Program and access to SDSs (or equal) on site for SPCC's own reference and employee training. All records shall be maintained at a location accessible to PTTLNG.

b. The legal storage, use, and disposal of any hazardous chemical or substance, and the disposal of waste materials brought on Worksite by SPCC, shall be the responsibility of SPCC.

c. SPCC employees shall be protected from inhaling hazardous substances in quantities that exceed national or international “allowable limits/exposure limits.”

5 HAZID OF CONTRUCTIONS CRITICAL ACTIVITIES

SPCC will perform a HAZID prior to the commencement of the WORK in order to identify the critical fabrication activities where appropriate levels of management will be required to comply with SHE requirements. Typical examples of critical activities, which may require special SHE requirements at the WORKSITE include:

- ✓ Transportation of heavy equipment;
- ✓ Loading, unloading of heavy equipment;
- ✓ Lifting and installation of heavy equipment;
- ✓ Other equipment requiring lifting and transportation;
- ✓ Traffic management;
- ✓ Work at height during simultaneous operations ;
- ✓ Management of SPCC’s specific WORKSITE;
- ✓ Coordination with OTHER SPCCS in accordance with the requirements of the SITE MANAGEMENT RULES;
- ✓ Fabrication activities and fabrication risks;
- ✓ Drainage systems;
- ✓ Crossings / bridges / roads / paths;
- ✓ Precautions and measures in place for flood conditions;
- ✓ All other issues raised as part of the HAZID.

If one HAZID session is insufficient for the SPCC’s activities, then additional

This document is the property of SPCC who will safeguard its rights according to the civil and penal provisions of the Law.

HAZID sessions shall be performed by SPCC and SPCC is obliged to invite PTTLNG to attend any HAZID session.
SPCC's SHE Manager(s) and SHE Officers will ensure that all issues raised during all HAZID sessions as well as other critical fabrication matters raised throughout the performance of the WORK are followed-up and addressed.

6 PERMIT TO WORK SYSTEM (PTW)

The Permit to Work ("PTW") System constitutes a formal method of ensuring safe work practices or a specific activity with identified hazards. The work permit granted through the PTW System stipulates the safety and precautionary or risk control measures to be applied with reference to the specific procedure.

PTW System will be prepared by CONTRACTOR and issued to the SPCC and all OTHER SPCCS and shall cover all activities on the SITE. The typical activities, where the PTW System will apply, as a minimum, are:

- ✓ Work at height;
- ✓ Confined space entry;
- ✓ Electrical isolation & re-activation;
- ✓ Welding / cutting / machining;
- ✓ Painting and surface blasting;
- ✓ Excavation;
- ✓ Piling;
- ✓ Heavy lifting;
- ✓ Scaffolding erection;
- ✓ Radiography work;
- ✓ Critical lifting ;
- ✓ Diving works
- ✓ Hot work (during COMMISSIONING and at locations near flammable materials).
- ✓ Prepare Critical Lift Permits and any required rigging designs.

The PTW System shall be organized, developed and controlled appropriately by CONTRACTOR to be in line with the PTTLNG SHE MANAGEMENT PLAN and fully applicable for each phase (e.g. CONSTRUCTION, COMMISSIONING etc.).

7 JOB SAFETY AND ENVIRONMENT ANALYSIS; JSEA

Prior to SPCC commencing Work at the Worksite, SPCC and all of its SPCCs will provide, for PTTLNG's review and non-objection, a detailed JSEA. This analysis shall identify the scope of Work, known and potential hazards, and corrective measures

This document is the property of SPCC who will safeguard its rights according to the civil and penal provisions of the Law.

and controls that shall be implemented to abate these hazards.

SPCC will ensure that all of its line supervisors fully understand the potential hazards involved in those aspects of the WORK under their supervision and that safe practices, safety precautions or actions to be followed in respect of the same and SPCC shall ensure that its line supervisors communicate these issues to all personnel involved in each activity forming part of the WORK prior to commencement of each activity forming part of the WORK.

SPCC will ensure that all JSEA carried out during performance of the WORK will be reviewed and approved by SPCC's SHE Representative and PTTLNG's designated SHE Manager.
SPCC shall pay special attention to the critical activities of transportation, fabrication, construction, and COMMISSIONING, in addition to interface with the OTHER SPCCS.

Before assigning personnel to any activity forming part of the WORK, SPCC shall carry out a JSEA for such activity.
The JSEA plays a significant role for the risk assessment of the various activities being carried out by SPCC at the WORKSITE and SPCC shall ensure that its results, together with
outcomes and conclusions are communicated to all personnel working on the WORKSITE by the appropriate means, which shall include presentations, meetings and tool box talks.
In addition to that, specific Method Statements and JSEA will be required to be developed and communicated for critical activities, as identified on the WORKSITE.

8 INSTRUCTION – ORIENTATION, TRAINING AND SAFETY MEETINGS

SPCC shall be required to provide instruction and training of its employees. Examples of such documented training to be provided by SPCC include, but are not limited to:

- ✓ Indoctrination/Orientation – Newly employed, promoted, and/or transferred employees shall be verbally instructed in the SHE practices required by their Work assignments. SPCCs shall reserve at least 6 hours per employee for orientation, issue of entry badges, and project SHE training initiatives.
- ✓ Work Assignments – All Work assignments shall include specific attention to SHE concerns. "Follow-up" monitoring shall be required in order to prevent accidents (JSEAs).

A. Meeting

- ✓ Weekly craft toolbox safety meetings shall be properly conducted and recorded. Additionally, staff meetings shall have a portion of the agenda devoted to SHE and accident prevention.

B. Special SHE meetings

SPCC shall arrange additional meetings to address special circumstances that may arise such as:

- ✓ Activities forming part of the WORK which require special instructions and precautions that have not been implemented at WORKSITE;
- ✓ Visits by government bodies or authorities due to non-compliance with LAW;
- ✓ Poor performance of specific Subcontractors;
- ✓ Major non-conformance with SHE requirements;
- ✓ Major incidents such as fatality, major fire or explosion;

This document is the property of SPCC who will safeguard its rights according to the civil and penal provisions of the Law.

- ✓ Security and emergency response incidents;
- ✓ Major impacts on SHE resulting from design changes during the construction phase of the WORK or potential hazards which were unknown prior to the LETTER OF AWARD.

Meetings shall be held between these personnel to discuss those hazards identified and to propose solutions to such hazards and any unsafe acts/conditions.

All SHE meetings shall be documented and the minutes of meeting submitted to PTTLNG within three (3) calendar days of such meeting, excluding in relation to those special or emergency SHE meetings (as described in the relevant minutes of meeting) which shall be submitted to PTTLNG immediately following the meeting.

C. Weekly Mass Toolbox Talk

SPCC will ensure that SPCC conduct a weekly mass “toolbox talk” at the start of each shift in a language understood by the relevant workforce.

Toolbox talks may be conducted by SPCC’s safety representatives, line supervisor or management. Topics for the toolbox talk shall be agreed between SPCC and SUB-CONTRACTOR.

This document is the property of SPCC who will safeguard its rights according to the civil and penal provisions of the Law.

9 SHE COMMUNICATIONS

Effective communications are vital to the successful implementation of the Project SHE Plan, Project Security Plan and Project Emergency Response Plan for the PROJECT. Communications will take many forms but their common objective is to improve understanding of SHE matters. SPCC will propose its overall strategy for communications of all matters relevant to SHE both for those involved in the PROJECT and at WORKSITE as required, in the Project SHE PLAN.

A. Craft and workers

Craft and workers will be trained in the life critical safety aspects of their job and will attend a training session of 8 hours minimum. Examples are: welder to be trained in Hot-work safety, steel erectors, scaffold builders and other required to work at an elevation to be trained in elevated work safety, people required to work in confined spaces to be trained in confined space and vessel entry safety, crane operator and riggers and signalmen to be trained in crane operation and rigging safety and drivers to be trained in driving safety awareness and defensive driving, etc.

B. Supervisors

All field supervisors and foremen shall attend a shall be trained a 2-days of safety supervisor/foremen courses to complying with the Thai Law. Safety standards and requirements will be dealt with in detail. This training shall be completed within 60 days of the employee's start-of-work at the project site.

C. Operators

SPCC shall submit prior to the mobilization of same the certifications for the following disciplines:

- ✓ Crane Operators
- ✓ Forklift Operators
- ✓ Plant / Heavy Equipment Operators
- ✓ Riggers
- ✓ Scaffolders / Inspectors
- ✓ Excavation Inspectors
- ✓ Confined Space Entry Hole Watchers
- ✓ Authorized Gas Testers

10 RECORDKEEPING OF INCIDENTS AND TRAINING

SPCC's responsibility is to maintain all records required by PTTLNG, state, local,

This document is the property of SPCC who will safeguard its rights according to the civil and penal provisions of the Law.

Workers' Compensation Insurance, or similar in-country regulations. This includes the maintenance of an accident log, annual summary, and the posting of all prescribed posters.

A log of SHE activities, near misses, accident investigations, employee instruction, training, toolbox meetings, etc., shall be maintained on Worksite and copies shall be promptly provided to PTTLNG upon request and in accordance with the Contract.

11 DRUGS AND ALCOHOL POLICY

PTTLNG's policy with regard to drugs and alcohol is very clear, SPCC will follow-up this policy :

'***No personnel are allowed at the WORKSITE to work under the influence of alcohol, drugs or other intoxicating substances, other than medically prescribed medication given by a Medical Doctor.'***

PTTLNG reserves the right to randomly require SPCC's and SUB-Contractor's employees to undertake a drugs & alcohol test and to terminate the employment of personnel, if they are found to be under the influence of alcohol, drugs or other intoxicating substances. These same rules also apply to drivers of buses, lorries or other vehicles operating within on SITE and operators of the SPCC's EQUIPMENT and other equipment during their presence on the SITE.

The possession, use, manufacture, distribution, or dispensation of any illegal drug or controlled substance shall be prohibited on PTTLNG property. In addition, SPCC employees working on PTTLNG property shall be expected to report for Work in proper condition and not be under the influence of any controlled substance.

SPCC agrees to provide for Work on the property of PTTLNG only those employees who understand the requirement of this Article and who will comply. SPCC agrees that, prior to assignment to Work under this Contract, such employees shall be chemically screened and confirmed. SPCC employees shall also be required to submit to (urinalysis) testing based upon reasonable suspicion, including aberrant behavior and post accidents report to Work in proper condition and not be under the influence of any controlled substance.

In addition, depending upon job requirements, SPCC employees may be subject to periodic random (urinalysis) testing. SPCC employees failing to conform to testing requirements or failing such tests shall be removed from the Worksite immediately and shall be restricted access to the project for an interval to be determined by PTTLNG site management. SPCC shall submit a copy of its Substance Abuse Prevention Program to PTTLNG for review and approval. PTTLNG shall also periodically review SPCC's program to ensure compliance with this Article.

Violation of this Article by SPCC may, at PTTLNG's option, be deemed by PTTLNG to be a material breach of this Contract and subject the SPCC to termination for default, as well as other remedies under contract, law, or equity.

This document is the property of SPCC who will safeguard its rights according to the civil and penal provisions of the Law.

12 SHE INSPECTIONS

SPCC's SHE Representative(s), designated as Competent Person(s), will be required to conduct and document routine SHE inspections (as directed by regulation, or, at a minimum, weekly for SHE-related inspections). These inspections shall include but not be limited to:

- ✓ Daily Site / Area Inspections
- ✓ Monthly Equipment / Material Inspections

This document is the property of SPCC who will safeguard its rights according to the civil and penal provisions of the Law.

13 FIRE PROTECTION/PREVENTION

The SPCC will be responsible 24 hours per day, 7 days per week for fire protection in its work and operational areas, including offices, tool rooms, and storage areas. SPCC must provide approved fire-fighting equipment at the work places and offices in adequate quantities and its employees must be trained in the usage of such equipment.

SPCC will at a minimum comply to the following requirements:

- ✓ Develop and present to PTTLNG for review a fire prevention training program and implement it to the work force.
- ✓ Adequate distance for firefighting equipment shall be maintained between temporary structures and permanent facilities.
- ✓ The use of wood or combustible temporary shacks around permanent buildings under construction shall be minimized. All temporary shacks shall be kept a minimum distance of 20 meters from the perimeter walls of such buildings.
- ✓ Temporary buildings and shelves and storage containers in warehouses shall

This document is the property of SPCC who will safeguard its rights according to the civil and penal provisions of the Law.

be built of non-combustible materials.

- ✓ Fireproofed cabinets or other fire resistant storage facilities shall be used wherever important documents are stored.
- ✓ Provide and maintain in accordance with the equipment inspection / maintenance schedule; alarms and smoke detectors.
- ✓ Provide portable or permanently mounted extinguishers shall be available within 10 meters of a workforce involving welding, burning or the use of an open flame.
- ✓ Each welder shall use welding blankets in order to contain weld splatter.
- ✓ At least one permanently mounted fire extinguisher shall be provided in each building near the door. Additional extinguishers shall be mounted so as to have one available within 20 meters of any point inside the building.
- ✓ Extinguishers shall be located within 15 meters of any point on the perimeter of material stored in fuel or combustible materials storage areas. Additionally, these areas shall be identified with signs restricting vehicle access and prohibiting fire ignition sources and smoking.
- ✓ A permanently mounted extinguisher shall be placed on each item of mobile industrial equipment having a diesel or gasoline engine, and on all welding machines.
- ✓ All fire prevention/firefighting equipment shall be inspected monthly to ensure they are in a good working order and replaced if faulty. Records of inspections shall be maintained for review by PTTLNG, as applicable.
- ✓ Equipment shall be switched off during refueling.

14 FIRE PROTECTION/HOT WORK (WELDING, CUTTING, BURNING, ETC.)

A. CONTRACTOR shall regulate smoking, open fires, carrying matches, and welding permits when and where deemed necessary in the interest of safety. SPCC will be responsible for and enforce requirements on SPCC employees, the employees of all SPCCs and visitors, who shall comply with the regulations and restrictions as directed. These smoking, open fires and similar regulations may vary during the progress of construction, or during testing or initial operation of any portion of the plant.

B. Within certain areas designated as "OPEN AREAS," CONTRACTOR shall issue a "HOT WORK PERMIT" on a daily basis that shall authorize open flames, burning, and welding activities during regularly scheduled Work hours.

C. Within certain areas designated as "RESTRICTIVE AREAS," CONTRACTOR shall issue a "HOT WORK PERMIT" daily that shall authorize open flames, burning, and welding activities during regularly scheduled Work hours. Smoking shall be permitted only in designated compounds. "OPEN AREAS" shall be reclassified as "RESTRICTED AREAS" whenever designated by PTTLNG and upon completion. For “RESTRICTED AREAS,” a trained person, referred to as a “fire watch,” shall be assigned and equipped with personal protective equipment provided by SPCC.

D. The fire watch shall be maintained during lunchtime and other breaks and shall continue for 30 minutes after welding operations have been completed. This individual

This document is the property of SPCC who will safeguard its rights according to the civil and penal provisions of the Law.

shall keep the area clear of unauthorized personnel during welding operations.

15 THIRD PARTY SHE INSPECTIONS

In addition to visits and SHE inspections by its own corporate or insurance representatives, SPCC is advised that the project may be inspected from time-to- time by authorized third parties. Among others so authorized shall be representatives of PTTLNG, insurance companies, and regulatory agencies. Upon their proper identification, they shall be entitled to Worksite access and courteous consideration. PTTLNG shall be made aware, if possible in advance, but in any case as soon as possible, of the purpose and results of such visits that relate
to SHE concerns.

16 CONSTRUCTION EMERGENCY PREPAREDNESS PLAN AND DRILLS

SPCC shall provide an area Emergency Preparedness Plan for evacuation of the Work area in the event of a natural disaster and/or project emergency. SPCC will be responsible for advising its employees and those of sub/lower-tier SPCCs of the potential hazards, emergency signals, and primary evacuation routes. SPCC is advised that mandatory periodic emergency evacuation drills shall be held. Any time lost by the SPCC in complying with these drills shall not be reimbursable.

17 CRANES AND DERRICKS

All cranes and derricks shall be certified as being in safe operating condition by a third party Inspection prior to submitting it to PTTLNG for review. The PTTLNG will inspect the crane/derrick, review the third party inspection certificate insurance certificate and drivers/operator license prior to the issuance of an access pass to the jobsite. Cranes will also undergo a third party inspection quarterly. All certifications shall be maintained by SPCC and made available to PTTLNG upon request.

Crane operators must be in possession of a valid Thailand's Government license to operate specific machinery. The operator should be trained, experienced and qualified for the operation of that specific make and model of crane. The utilizing SPCC should provide operator experience documentation even if he is using a SPCC on site.

SPCC will employ competent employees that have undergone adequate and recognized training, that have experience and certification to perform their duties.

18 EQUIPMENT AND MOTOR VEHICLES

A. All equipment shall be inspected daily, prior to use, by SPCC's operator.

This document is the property of SPCC who will safeguard its rights according to the civil and penal provisions of the Law.

Formal inspections shall also be made by SPCC's Competent Person at 30-day intervals with proper documentation maintained at the Worksite by SPCC. Copies of inspections shall be made available to PTTLNG upon request.

B. Defective equipment shall be repaired or removed from service immediately.
C. All cracked and broken glass shall be replaced prior to bringing vehicles on the Worksite. If glass is broken or damaged on Worksite, and if damage is severe enough to cause a potential safety problem, the equipment shall be removed from service until such damage has been properly repaired.
D. The view of the operator will not be blocked or obstructed in any way. SPCC will obtain approval from PTTLNG should UV protection film may be fitted to reduce the sun light, sheeting to reduce wind and / or rain disturbance.
E. Vehicles used to transport employees shall have seats firmly secured and have an adequate number of seats and securements (seat belts) for the number of employees to be carried. All passengers shall be properly seated. Standing on moving vehicles shall be prohibited.
F. Locations for storage of all fuels, lubricants, starting fluids, etc., shall be reviewed by PTTLNG prior to use by SPCC for storage.
G. Seatbelts shall be worn by all CONTRACTOR employees operating (or riding in, where allowed) any motor vehicle and any equipment (including cranes and rollers) with rollover protection structures during performance of the work.

19 ELECTRICAL

A. All electrical work, installation, and wire capacities shall be in accordance with the pertinent provisions of the National Electrical Code or equivalent in-country standards.
B. SPCC shall develop and implement a lockout / tagout procedure and strictly adhere to the use of this procedure. PTTLNG shall monitor adherence to the procedure on a regular basis.
C. All temporary power panels shall have covers installed at all times. All open or exposed breaker spaces shall be adequately covered.

20 FLOOR AND WALL OPENINGS AND STAIRWAYS

A. Floor and wall openings shall be guarded by a standard guardrail, mid-rail, and toe-board, or adequately covered.
B. Guardrails shall be of sufficient strength to support 200 pounds (90 kilograms) of pressure when applied at mid-span of the guardrail parallel with the floor and perpendicular to the guardrail with a minimum deflection of 2 inches (50 millimeters).
C. Covers shall be adequately secured to prevent displacement and have "Danger" signs attached identifying the hazard.
D. Every flight of stairs having 4 or more risers shall be equipped with standard stair railings. Stairs shall not to be used until risers and railings are securely installed. Treads shall be poured as soon as possible where poured treads apply.
E. Debris and other loose materials shall not be allowed on stairways or at access point to stairway and shall be immediately removed. Debris shall not be allowed to accumulate in stairwells.
F. SPCC shall be required to replace any floor and wall opening or protective systems removed during the course of their Work.

This document is the property of SPCC who will safeguard its rights according to the civil and penal provisions of the Law.

21 LADDERS

A. All ladders shall comply with Thai law and the requirements as per PTTLNG for Construction.
B. Makeshift wooden ladders and painted wooden ladders shall not be used.
C. Ladders shall be inspected weekly by a competent person.
D. Ladders shall be tagged and with the same tags used for scaffolds.

E. When not secured at the top, ladders will be properly anchored at the base to prevent the footings from slipping and a second person shall hold the ladder firm in place while being used.
F. When ladders are being used for accessing at the same point more than once, it shall be properly secured at the top and extend at least one meter above the landing or work surface.
G. Ladders shall always be supported on the ground or floor but never hung.
H. Ladders shall always be used at an angle of 75%. Ladders shall not be used in a vertical position.
I. SPCC shall develop and maintain a ladder register to track location, use, condition,
inspections and defects.
J. Only non-conductive ladders shall be used when working with or around live / energized systems.

22 EXCAVATIONS AND TRENCHING

A. Prior to opening any excavation or trench, CONTRACTOR shall notify PTTLNG. In addition, CONTRACTOR shall contact any other necessary entities to determine whether underground hazards such as contaminated soil, containers, or equipment, or installations such as sewer, telephone, fuel, electric lines, etc., may be encountered and where they are located.
B. SPCC shall designate a competent person trained in soil classification and the recognition of trenching and excavation hazards.
C. Appropriate documentation to meet the PTTLNG's trenching and excavation standards is to be kept on site.
D. Only hand excavation shall be permitted where confirmation regarding absence of underground facilities cannot be achieved.
E. Excavations and trenches shall be inspected by a competent person daily and after every rainfall to determine if they are safe.
F. All banks 1.2 meters high or more shall be sloped to 34 degrees unless soil is analyzed by a competent person allowing a greater slope angle or shall be adequately shored.
G. Where, given the inherent constraints of the environment, shoring is not possible, the Excavation / Trench may be benched or braced or, be provided for against additional engineered solutions, which shall be reviewed and accepted by the PTTLNG prior to execution.
H. Ladders or steps shall be provided and secured in all trenches 1.2 meters or more in depth. Ladders or steps shall be located to require no more than 7.5 meters of lateral travel before having accessed or egress and shall extend 1.0 meter above the top of the trench bank.
I. Material excavated shall be stored at least one meter from the edge of the

This document is the property of SPCC who will safeguard its rights according to the civil and penal provisions of the Law.

excavation or trench or shall be shored to prevent material from falling into the excavation.

J. All trenches and excavations shall be properly barricaded with a hard physical barricade (not tape or rope) to prevent persons from walking into them.

K. All walkways or ramps crossing over excavations shall be securely fastened and equipped with standard guardrails.

This document is the property of SPCC who will safeguard its rights according to the civil and penal provisions of the Law.

23 STEEL ERECTION

A. SPCC shall adhere to applicable in-country regulations.
B. At no time shall there be more than 3 floors or 12 meters of unfinished bolting or welding above the foundation or uppermost permanently secured floors.
C. A temporary and/or permanent floor shall be maintained within 2 stories or 10 meters, whichever is less, below and directly under that portion of each tier of beams on which any work is being performed.
D. Planking or metal decking in temporary floors shall be of proper strength and thickness to carry the working load. Decking shall be secured to prevent movement.
E. Standard guardrails and toe-boards shall be installed around open sides of permanent floors. During structural steel assembly scaffold tubing shall be used to construct railings to scaffold specifications or, a safety railing (cable) of 12mm diameter shall be installed approximately 1.1 meter high, recessed into interior of floor around all temporary floors.
F. Where fall distance exceeds 1.8 meters, scaffolds, ladders, catch platforms or full body harness, double lanyards and shock absorber attached to lifelines or other substantial objects shall be used. If the use of these is impractical, safety nets shall be provided.
G. Tag lines shall be used to control all loads and Shepherd hooks to retrieve same safely from a reasonable distance from suspended load.
H. Containers shall be provided for storing or carrying bolts or rivets. When bolts, drift-pins, or rivet heads are being removed, a means shall be provided to prevent accidental displacement. Tools shall be provided lanyards (not secured to the wrist) to prevent falling.
I. During the final placing of solid web structural members, the load shall not be released
J. from the hoisting line until the members are secured with not less than 2 bolts or equivalent at each connection.
K. SPCC shall not allow any of employees to walk the steel.
L. A safe means of access to the level being worked shall be maintained.
M. Climbing and sliding columns are not considered safe access and not allowed.

24 CONFINED AREAS OR SPACES

A. CONTRACTORs shall adhere to applicable federal, state, local, and in-country regulations (such as 29 CFR 1926.146).
B. SPCC shall develop an entry procedure, and submit to PTTLNG for review and non-objection, to be used when CONTRACTOR employees are required to enter confined areas or spaces. Such areas include, but are not limited to, storage tanks, process vessels, bins, boilers, ventilation or exhaust ducts, sewers, underground utility vaults, tunnels, pipelines, open-topped pits, basements, and temporary wood framing covered with plastic.
C. All SPCC employees who are required to enter confined areas or spaces shall be instructed as to the nature of hazards involved, necessary precautions to be taken, and the use of required protective and emergency equipment.

This document is the property of SPCC who will safeguard its rights according to the civil and penal provisions of the Law.

D. Prior to SPCC employees being permitted to enter into any confined areas or spaces, the atmosphere within the space shall be tested to determine the oxygen level and concentration of flammable vapors, gases, and toxic contaminants. CONTRACTOR needing access to the confined area shall furnish the testing equipment and a person trained/knowledgeable in the use of the testing equipment.

E. When welding, cutting, or heating in confined areas or spaces, ventilation shall be provided. When sufficient ventilation cannot be provided without blocking the means of access/egress, SPCC employees shall be protected by airline respirators.

F. An employee of SPCC shall be stationed outside the confined area, whenever required, to maintain communication with those working within and to initiate an emergency response in accordance with approved permit or other requirements for the project.

G. Hazardous atmosphere means an atmosphere that may expose employees to the risk of death, incapacitation, impairment of ability to self-rescue, injury, or acute illness from:

- ✓ Flammable gas, vapor, or mist in excess of 10 percent of its lower flammable limit (LFL)
- ✓ Airborne combustible dust at a concentration that meets or exceeds its LFL (which may be defined as a condition in which the dust obscures vision at a distance of 5 feet (1.52 meters) or less
- ✓ Atmospheric oxygen concentration below 19.5 percent or above 23.5 percent
- ✓ Atmospheric condition or concentration of any substance that is immediately dangerous to life or health as published in 29 CFR 1910.146 (Z) or (G), or in-country equivalent, or may be capable of causing one of the above reactions

25 SANITATION

The SPCC will provide an adequate supply of potable water in all its work areas daily and test water supply weekly.

- ✓ Portable containers for drinking water shall be tightly closed, and equipped with a tap. Water shall not be dipped from containers.
- ✓ Drinking water containers shall be clearly labelled as to the nature of its contents, and shall not be used for any other purpose.
- ✓ Drinking water containers shall not be opened in the field by anyone other than employees designated to service and maintain the containers.
- ✓ Non-potable water outlets shall be clearly labeled as being unsafe for drinking, or washing purposes.
- ✓ Portable water containers shall be cleaned weekly, using bleach wash and baking soda rinse.
- ✓ Single use drinking containers shall be provided at each water container.
- ✓ Adequate trash containers shall be provided to dump the single use drinking containers. The use of a common drinking cup will not be permitted. Personnel are not permitted to drink directly from the container.
- ✓ Toilet facilities shall be provided for workers/employees to the ratio of one toilet

This document is the property of SPCC who will safeguard its rights according to the civil and penal provisions of the Law.

per 20 employees.

- ✓ All job site toilet facilities shall be serviced and cleaned with steam, chemicals and detergents at least once daily or more frequently depending on the amount of use.
- ✓ Portable toilets on the project shall be strategically located so as to provide adequate coverage for all active work areas. In multi-story structures, no more than two (2) floors will separate each toilet.
- ✓ SPCC shall provide a dedicated team to maintain, service and keep clean and hygienic all sanitary facilities and otherwise occupied spaces.
- ✓ The frequency of cleaning portable water containers should be more once a week.
- ✓ CONTRACTOR shall be proposed of the portable toilets locations on the SITE to PTTLNG/PMC for review and approval before mobilize into site.

26 LUNCH / BREAK AREAS

Employees shall take breaks and eat lunch in designated areas only. These areas shall be free from hazardous materials or other possible contaminates.

- ✓ Lunch and break areas shall be removed from active work areas where employees would be exposed to ongoing work while eating lunch or taking a break.
- ✓ Lunch and break areas shall be covered (so as to protect against the inherent environmental elements), well ventilated and kept cool and shall meet 100% the capacity of the on-duty / on-site work force.
- ✓ SPCC shall ensure all trash, debris and food residues are cleaned up at the end of the break.
- ✓ Consumption of food shall be prohibited in work areas.
- ✓ The locations and requirement of such facility shall be approved by PTTLNG.

27 HEAT STRESS

A. SPCC shall provide adequate numbers of heat stress shelters or shaded areas for employees to rest to prevent heat stress or heat exhaustion when working in the open work areas.

B. SPCC shall equip the heat stress shelter fans or other means of cooling, normal drinking water and drinking water enriched with minerals and electrolytes.

C. SPCC shall submit to PTTLNG a design for such heat stress shelter for review and approval and a plot plan indicating the location of the shelters.

28 SMOKING

PTTLNG reserves the right to regulate smoking, open fires, carrying matches, and welding permits when and where deemed necessary in the interest of

This document is the property of SPCC who will safeguard its rights according to the civil and penal provisions of the Law.

safety. SPCC shall be responsible for and so enforce SPCC's personnel, the personnel of all subcontractors and visitors to comply with the regulations and restrictions as directed. These smoking, open fires and similar regulations may vary during the progress of construction, or during the testing or initial operation of any portion of the plant. Smoking will not be allowed in any office, building or vehicle on the project. PTTLNG requires that SPCC shall provide degenerated and isolated shelters for smoking and keeping matches and provide fire extinguisher sand bucket and ashtray. CONTRACTOR shall seek the authorization of the PTTLNG for the location where SPCC intends putting these shelters.

29 IONIZING RADIATION

The SPCC shall appoint qualified employee as Radiation Safety Officer. The person shall be responsible for aspects of work involving the storage, the handling, the transportation and the use of ionizing sources on the project and ensure safe work practices and procedures are followed by CONTRACTOR employees and sub-contractors. All ionizing and radioisotope source and x-ray work will be done with the coordination of other project participants working on the project.

SPCC shall ensure all personnel that are occupationally exposed to ionizing radiation, are subject to a regular medical check and continual medical monitoring, a copy of such medical report must be kept on record and made available for inspection to authorities and PTTLNG.

SPCC shall obtain an approved permit from PTTLNG for all work involving ionizing radiation occurring by natural decay of radioisotopes (nuclides) and / or x-rays as produced by electrical means from portable or static equipment. Permits shall be submitted 24 hours in advance for approval with an area plot plan indicating the area the work is to be performed.

SPCC shall inspect prior to the start of ionizing radiation work to ensure :

- ✓ People that are performing the work are licensed and have valid certification recognized by the Thailand's Government.
- ✓ Each person involved in the work has a monitoring film badge and a pocket dosimeter.
- ✓ A survey meter with audible and visual alarms is in the area for radiation area monitoring and shall acquire the source each time.
- ✓ All inspections and certification of equipment are current and complies with applicable Government standards and PTTLNG rules.
- ✓ An accurate accounting system is kept for each source coming onto the project and shall include the serial number, receipt date, decay chart and projector or transit container used.
- ✓ The work areas in which ionizing radiation work is to be performed are barricaded, warning signs and lights posted, perimeter guards posted and all workers removed from the area before the work starts.

This document is the property of SPCC who will safeguard its rights according to the civil and penal provisions of the Law.

- ✓ A safe access and egress are to be provided to the work location with adequate lighting.

SPCC shall obtain proper approval from PTTLNG and Thailand's Government for storage facilities and to store ionizing and radioisotope sources. CONTRACTOR shall comply with all requirements of authorities.

SPCC shall ensure all vehicles transporting ionizing and radioisotope sources onto the project are fitted with yellow revolving lights on rooftop and are marked "NDT Radiography" on both sides and rear end of the vehicle.

30 HEXAVALENT CHROMIUM

A. SPCC shall provide the necessary training to persons performing work (welding of stainless steel) in the hazards of Hexavalent Chromium.
B. SPCC shall apply suitable respiratory protection program, including of pre-medical evaluations (respiratory function tests, blood baselines tests and a full physical), periodic medical evaluations and post project medical evaluations of persons performing such work as described above.
C. SPCC shall make available the appropriate respiratory and full body protection in protecting against the hazards of hexavalent chromium.
D. SPCC shall establish a safe environment for the execution of such work by way of schedule or physical barricade to eliminate impact to persons not directly involved in the work described above.
E. SPCC shall make available a decontamination zone for persons donning and disrobing from garments worn during the execution of the work described above prior to leaving the immediate work area for breaks or at the end of a shift.

31 PAINTING AND BLASTING

A. SPCC will ensure the plant & equipment used by the operators during spray painting and grit blasting operations comply with international standards unless otherwise specified by PTTLNG. Operators shall be properly trained and records made available to PTTLNG on request.
B. Compressors supplying airline respirators shall be tested for grade 'D' air quality (non - contaminated breathing air) before being allowed to operate on the project and every month thereafter thus ensuring persons health is not being put at risk. A record of these tests shall be kept on the project and made available to PTTLNG on request.
C. Compressors shall have filters in the delivery hose to continually remove moisture, oil and particulate. The filters shall be renewed periodically and the date of the renewal will be identified on the outside of the filter. It shall have a carbon monoxide (CO) monitor and alarm between the oil lubricated compressor and the respirator air intake. It shall also be equipped with a 140 degree F. (60 degree C.), high temperature alarm on the air intake of an airline respirator and have a minimum

This document is the property of SPCC who will safeguard its rights according to the civil and penal provisions of the Law.

hood air flow 6.

D. Air receivers providing air to airline respirators shall be constructed in accordance with the 1968 edition of the ASME Boiler and Pressure Vessel Code Section V111. It shall be installed so that all drains, hand- holes and manholes are easily accessible, equipped with an indicating gauge and with one or more spring loaded calibrated safety relief valve.

E. Hoses shall have whip-lash arrestors installed at all joints especially at quick release couplings, and the compressed air reduced to less than 30psig (210kpa) to prevent injuries.

32 LIVE LINES

A. When steam blowing, chemically cleaning, pneumatic testing, hydro- testing or pressure testing pipelines or putting any product into pipelines, SPCC Will ensure people engaged in the work are properly trained in their tasks and the dangers of the work and the safety precautions to be taken. SPCC will ensure an approved permit is obtained from.

B. Barricades shall be placed at a calculated distance or at a minimum 20-meter safe distance around the areas in which such work is being performed and signs posted. Access into the area shall be controlled to allow only the people directly involved in the work. CONTRACTOR shall deploy perimeter guards to control access.

C. All flanges, gaskets and valves shall be checked prior to testing, valves and blinds locked in the correct open or close position, and tested for leaks once the work started and periodically thereafter.

D. SPCC shall ensure an Emergency Response Team near the area consisting at a minimum of an ambulance, first aid people, fire fighters and firefighting equipment and that proper communication channels are established.

33 PERSONAL PROTECTIVE EQUIPMENT

A. PPE, such as gloves, glasses, ear plugs, dust masks etc, shall be observed as a consumable. All required PPE shall be administered by the CONTRACTOR without charge or deduction from wages to the worker. Should cases of negligence be determined by the CONTRACTOR, the CONTRACTOR shall present the case to PTTLNG before action is taken against the worker.

B. FRC – Fire Retardant Clothing within areas classified as Hazardous Zones or as required against the JSA, Long sleeve shirts shall be worn at all times. Sleeveless shirts and tank tops are not permitted.

C. Folding in of the back part as to convert to a slip-on shoe will not be permitted. Sandals, tennis shoes, or any other street type shoe will not be permitted.

D. Loose fitting clothes or jewelry shall not be worn around such things as moving machinery, grinding operations.

E. Approved hard hats meeting specifications contained in ANSI (American National Standards Institute) Z89.1-1981 and/or Z89.2-1971 will be worn at all times when outside offices and vehicles. Hard hats shall also be worn when employees

This document is the property of SPCC who will safeguard its rights according to the civil and penal provisions of the Law.

are engaged in activities requiring goggles, welding hoods and shields and face shields.

F. Safety glasses, complying to international standards (ANSI Z87), with side shields are required in plant and construction areas at all times when outside offices and vehicles. Dark safety glasses may be worn during daytime. Clear or amber glasses must be worn at night or in poor illuminated areas during daytime.

G. Safety nets shall be installed when people are working at elevated levels in structures to contain debris, material and other loose items falling from above to protect people working below. Nets shall be cleaned frequently to prevent fire hazard resulting from debris accumulating.

H. Protective earplugs must be worn when noise levels in working areas exceed specified safety limits of 80dB. CONTRACTOR shall measure the noise levels of each area where noise is present to determine noise levels and each area where the noise level exceeds 8odB shall be posted with warning and ear protection signs. Records of measurements shall be maintained and made available to PTTLNG for review upon request. Double Hearing protection or other means of protecting hearing shall be determined by the JSA and made available by the SPCC should the need arise.

34 SIGNS, SIGNALS, BARRICADES AND LIGHTS

A. Signs, signals and barricades shall be visible at all times where a hazard exists.

B. All streets, roads, highways, and other public thoroughfares, which are closed to traffic, shall be protected by effective barricades on which shall be placed acceptable and highly visible warning signs. Barricades shall be located at the nearest intersecting public highway or street on each side of the blocked section.

C. All floor openings, open trenches and other excavations shall be provided with suitable floor opening covers, barriers, signs and lights to the extent that adequate protection is provided to the public. Obstructions such as material piles and equipment shall be provided with similar warning signs and lights.

D. All barricades and obstructions shall be illuminated by means of warning lights from

E. sunset to sunrise. Materials stored upon or alongside public streets a highways

F. shall be so placed, and the work at all times shall be so conducted as to cause the minimum obstruction and inconvenience to the travelling public.

G. All barricades, signs, lights and other protective devices shall be installed and maintained in conformity with applicable statutory requirements and, where within railroad and highway right-of-way as required by the authority having jurisdiction there over.

H. Adequate safe pedestrian crossings shall be provided over trenches and excavations and constructed to applicable Thailand scaffolding standards with regards to rails and walkway (platform), and be of a strength that meets the load bearing criteria of at least 10 people. These crossings shall be inspected weekly and tagged with the same tagging system used as for scaffold inspections.

This document is the property of SPCC who will safeguard its rights according to the civil and penal provisions of the Law.

35 RIGGING EQUIPMENT

A. All rigging equipment shall be free from defects, in good operating condition and maintained in a safe condition and shall bear the serial number of the manufacturer and the Safe Working Load capacity (SWL) marked on it. All rigging equipment will also be accompanied by the manufacturer's certificate indicating the serial number and capacity.

B. A designated, competent employee of SPCC prior to initial use on the jobsite shall inspect rigging equipment and monthly thereafter to ensure that it is safe. Records shall be kept on jobsite of each of these inspections by SPCC and shall be made available to PTTLNG upon request. Any defective rigging equipment or materials that are observed shall be destroyed or immediately removed from the site.

C. SPCC will ensure all spreader bars have an engineered design and a test certificate for the Safe Working Load capacity (SWL) clearly marked on it. SPCC will keep relevant documentation on record and make it available upon request to PTTLNG.

D. CONTRACTOR shall develop, maintain and apply the use of a Lifting and Rigging gear register, which shall capture, but not be limited to:
   - ✓ Use
   - ✓ Location distributed to
   - ✓ In / Out
   - ✓ Inspections
   - ✓ Defects / Repairs

E. No person shall be employed as a rigger until he has successfully completed the site rigger's certificate training course.

36 POWER TOOLS AND HAND TOOLS

A. All hand and power tools, whether furnished by CONTRACTOR or by CONTRACTOR's employee shall be maintained in a safe condition.

B. SPCC shall not issue nor permit the use of unsafe hand or power tools.

C. Electrical power tools shall 220 Volts, grounded or double insulated with proper assured equipment grounding, or ground fault interrupter circuit protection provided.

D. Pneumatic power tools shall be secured to the hose or whip by some positive means such as tied off with stainless steel wire or clips. Couplings of pneumatic hoses will be properly secured and in addition all pneumatic hoses will be fitted with a whiplash arrestor across couplings.

E. All grinding machines shall conform to applicable PTTLNG requirements. Hand held grinders such as angle grinders, surface requirements. Hand held grinders such as angle grinders, surface grinders, pencil grinders, etc. shall be equipped with a dead-man switch.

F. Cords, leads and hoses shall be kept at least 2.0 meters off the ground or whatever height is necessary to be protected from traffic and prevent tripping hazards.

G. Proper cable management shall be adhered to continuously. Cables may be buried if

This document is the property of SPCC who will safeguard its rights according to the civil and penal provisions of the Law.

insulated within a PVC sleeve and surface markers made available and maintained. All surface markers shall be a part of the weekly inspection program.

37 COMPRESSED GAS CYLINDERS

A. Cylinders shall be kept away from sparks, hot slag and flames or be adequately protected.
B. Cylinders shall not be placed where they can become part of an electrical circuit.
C. Cylinders shall be labeled as to the nature of their contents.
D. Oxygen cylinders in storage shall be separated from fuel gas cylinders or combustible materials a minimum of 6.0 meters, or by a non-combustible barrier at least 2.0 meters high having a fire resistant rating of at least one half hour. Empty cylinders shall be separated as above from full cylinders and stored with like cylinders.
E. No Smoking signs shall be posted at storage areas and signs shall clearly indicate contents of cylinders.
F. Anti-flashback arrestors and check valves shall be installed on all oxygen and acetylene cutting gear. The anti-flashback arrestor shall be installed at the regulator end and the check valve at the cutting torch end of each hose while in operation.
G. When not stored in cradles, compressed gas cylinders shall be secured with chains in an upright position at all times. Gas cylinders in use shall be placed in an upright position in trolleys and secured by chains.
H. When transporting, moving and storing cylinders valve protection caps shall be in place and secured. Cylinders shall only be transported in an upright position and secured to prevent them from falling over.
I. Cylinders shall not be hoisted by magnets or choker slings. Valve protection caps shall not be used for hoisting cylinders. Cylinders may only be hoisted in engineered designed cages/cradles bearing the SWL capacity of the cage/cradle. The cradles/cages must be designed to a safety stress factor of at least five of the maximum load. A competent engineer approved by PTTLNG, must inspect such cages/cradles weekly and certify it safe for use.
J. Domestic gas cylinders shall not be broad into the construction site. Special request to use of domestic gas cylinder at construction site shall be proposed and submitted to PTTLNG/PMC for further approval.

38 SCAFFOLDS

A. All scaffolds will be built/erected and dismantled and used as per the specifications and requirements of Thailand standard unless otherwise specified by PTTLNG.
B. Scaffolding not adaptable to guard rails shall require the use of safety harnesses with the lanyard attached to a secure substantial object.
C. Mobile scaffold casters shall be secured and locked prior to mounting. No Personnel shall be on mobile scaffold when it is being relocated.

This document is the property of SPCC who will safeguard its rights according to the civil and penal provisions of the Law.

D. SPCC's employees working swing stages, boatswain chair, floats, suspended scaffolds, man-lifts, suspended man-baskets and needle beam scaffolds shall wear safety harnesses with double shock absorbing lanyards and with lanyards attached to an independent lifeline.
E. SPCC will ensure all scaffolds are inspected and tagged safe for use prior to the use thereof and weekly thereafter by a competent scaffold inspector. A proper scaffold inspection and tagging system, which is consistent with universally recognized industry standards, shall be utilized and maintained. Unsafe scaffolds will be tagged unsafe and rectified immediately.
F. People using such incomplete scaffolds or scaffolds not specifically declared safe, are violating the 100% fall protection policy and may be removed from the jobsite. Only competent scaffold builders are allowed on unsafe or incomplete scaffolds for the purpose of completing the scaffold, making it safe or the dismantling thereof.
G. Personnel erecting or dismantling scaffolding shall be trained and certified by a qualified trainer before the commencement of the work.

39 TEMPORARY PIPE SUPPORTS

All temporary pipe supports and pipe supports used shall have an engineered design, with a safety stress factor of at least two, safe working load capacity displayed on it and inspected by an engineer prior to use and inspected monthly thereafter. The design of temporary pipe supports and pipe supports will have proper end stops and end footings without any overhang. Lists of each design and type indicating its purpose of use, safe working load capacity and pipe bore shall be submitted to PTTLNG.

40 EQUIPMENT PRESERVATION

SPCC will ensure the equipment is preserved according to the specifications of the manufacturer, people involved in the work are trained and the equipment used for preservation (charging / removal), is inspected and safe for use. SPCC shall ensure regulators are rated for the maximum cylinder pressure, gauges are calibrated, hoses used are of the correct type and hoses used for purging are not metal, fittings and connections are the correct type and pressure relief devices are set at the correct pressure. Gas used for purging is not flammable or toxic, cylinder is charged, cylinder valve is operational and key attached. Equipment to be charged / released shall be visually checked for damage, for flange tightness, leaks or any missing items prior to the introduction of the charging /removal medium. Any missing items, damage or loose connections must be rectified before activities take place. Barricades and signs shall be placed around the area.

41 MONTHLY INSPECTION PROGRAM

All of the following:- fuel driven construction equipment, hand and power tools,

This document is the property of SPCC who will safeguard its rights according to the civil and penal provisions of the Law.

electrical equipment, electrical man-lifts, man-baskets, gas cylinder cradles used for lifting, lifting equipment including slings, spreader bars and shackles, cranes, temporary pipe supports and pipe supports in fabrication shops, hoists, temporary electrical distribution boards, fire extinguishers, welding and cutting equipment, ladders, fall protection devices such as full body harnesses and inertia real fall arrest systems, shall be inspected monthly by competent person of SUBCONTRACTOR which shall provide for report to CONTRACTOR within the third day of each month. All equipment shall bear a color coded sticker or tag with the SPCC's name, own equipment identification/serial number or manufacturer's model or serial number, date of inspection and the signature of the competent person inspecting the equipment. SPCC will provide to issue color code sticker every 3 months. Equipment without a valid inspection by a competent person and valid color-coding shall not be used and removed from the project site.

Sample :

Month	Jan-Feb-Mar	Apr-May-Jun	Jul-Aug-Sep	Oct-Nov-Dec
Color				

Equipment/Item in quarantine

42 DRIVING & TRANSPORTATION

SPCC shall adhere to the PTTLNG's driving procedures, posted signs and specified speed limits in PTTLNG operating areas and within the site environs. In the event that any of the SPCC's personnel do not follow safe driving practices, posted traffic signs and exceed speed limits, the PTTLNG may direct the SPCC to replace such personnel at no additional cost to the PTTLNG.

- ✓ The SPCC shall fully comply with the PTTLNG's Fire & Safety Regulations and SHE Guidelines for CONTRACTORs with respect to all vehicles.
- ✓ The CONTRACTOR shall ensure that all its drivers comply with the Thailand's driving regulations and rules.
- ✓ All SPCC drivers shall undergo a Defensive Driving course on an annual basis and provide the training certification and records to PTTLNG. PTTLNG reserves the right to remove any SPCC / SPCC CONTRACTOR personnel from the Worksite for failing to comply with the Driving Procedure, even in the case of a first violation.
- ✓ All equipment drivers / operators, drivers must only be employed on the Worksite as drivers / operators. No driver / operator are permitted to work in another capacity.
- ✓ SPCC is required to demonstrate the experience, qualifications, certification, and applicable Government license of any person employed as a driver / operator of any mobile equipment or vehicle.
- ✓ Maximum speed limit is 30 kilometers per hour. However, much slower All SPCC's means of ingress and egress routes will be adequately
- ✓ Any ATV's used on the jobsite will be 4 wheeled, not 3 wheeled and only on

This document is the property of SPCC who will safeguard its rights according to the civil and penal provisions of the Law.

approval of PTTLNG.

- ✓ The use of cell phones and two way radios are strictly prohibited while driving a vehicle or operating equipment. Equipment operators and vehicle drivers must stop prior to the use of PTTLNG issued cell phones or two way radios.
- ✓ SPCC shall develop and implement a Man / Machine Interface Program and as far as it is reasonably practicable, ensure that an area is at all times suitably lit and that pedestrians are segregated by hard barricade/ signage and policing from moving vehicles and / or vehicle thoroughfares.

43 OCCUPATIONAL HEALTH

A. Pre-employment medical screening
SPCC shall ensure that all its employees and SPCC SUB-CONTRACTOR's employees engaged in the WORK are declared medically fit for the job and healthy by an Occupational Health Doctor. Any medical diseases or disabilities which may adversely influence the employee's ability to perform his role in the WORK shall be reported to PTTLNG prior to the commencement of the WORK.

B. Medical Welfare of Personnel
SPCC shall at no cost to PTTLNG be responsible for the medical benefits of its own and SPCC SUB-CONTRACTOR's employees. SPCC shall make necessary arrangements for medical consultation, treatment or hospitalization if and when necessary and will arrange suitable insurance coverage for such contingencies.

C. SPCC's simple first aid / medical room, medical facility and first aid station

SPCC is responsible to provide first aid / medical room located at an appropriate location at the SITE within its own camp area. The facility should be manned throughout the working hours and comply with requirement of PTTLNG SHE MANAGEMENT PLAN.

- ✓ SPCC is responsible to build and operate a first aid station ("FAS") within its own construction area manned with medical personnel on a 24 hours a day / 7 days a week basis.
- ✓ SPCC is responsible to provide first aid boxes within its own camp area and construction area.

44 FIRST AID AND INJURY REPORTING REQUIREMENTS

A. Personnel and Supplies

- ✓ SPCC shall ensure the availability of medical personnel for advice and consultation.
- ✓ Prior to commencement of Work, SPCC shall make provisions for prompt medical attention in case of serious injury to its employees.
- ✓ SPCC shall ensure that at least one of SPCC's employees is available at the

This document is the property of SPCC who will safeguard its rights according to the civil and penal provisions of the Law.

Worksite to render first aid for each 15 employees performing Work at the Worksite. The individual(s) must have a valid certificate in first-aid training from the authorities training center, or equivalent in-country source that can be verified by documentary evidence.

- ✓ SPCC shall ensure that first-aid supplies approved by SPCC's consulting physician are easily accessible when required.

SPCC shall provide an adequate number of first-aid kits and supplies approved by the consulting physician. First-aid kits shall be easily accessible and shall be in a weatherproof container with individual sealed packages for each type of item. Contents of the first-aid kits shall be checked by CONTRACTOR for completeness and accuracy prior to being sent out to the Worksite and at least weekly during performance of the Work to ensure the expended items are replaced.

B. Incidents and Medical Procedures

CONTRACTOR shall immediately communicate all incidents (near misses included) to
the PTTLNG SHE Representative, and submit a documented investigation report within 24 hours of notification. All investigation(s) reports and support documentation shall be submitted to the PTTLNG SHE Representative:

- ✓ All SPCC shall participate in the PTTLNG Modified Return-to-Work Program, which shall be based upon project/site management's commitment that temporarily or partially disabled employees, as the result of an occupational injury or illness, can productively return to Work prior to resuming normal job duties.
- ✓ All obvious or potential workers' compensation claims shall be reported to the appropriate insurance carrier within 24 hours of notice to the CONTRACTOR.

45 DISCIPLINARY ACTION

SPCC shall follow the disciplinary action below or SPCC's Disciplinary Action Program if it is deemed more stringent by PTTLNG. However, SPCC may be required to remove an employee from the project site at the request of PTTLNG.

A. Serious SHE Violation

- ✓ A Serious SHE Violation is an infraction of project SHE rules that involves a substantial probability that death, serious physical harm, major equipment damage, major property damage, or Work stoppage could result as a result of the infraction.
- ✓ A SPCC employee who commits a Serious SHE Violation or is in an IDLH situation shall be given a written reprimand by CONTRACTOR and/or

This document is the property of SPCC who will safeguard its rights according to the civil and penal provisions of the Law.

shall be removed from the Worksite and not returned to duty at the Worksite if such violation is determined by PTTLNG in its sole judgment to be a flagrant violation. A documented oral reprimand shall not be issued for this type of safety violation.

- ✓ A second violation categorized as serious shall result in the automatic removal of the employee from the Worksite by CONTRACTOR, provided the second violation occurs within one (1) year of the first.

B. Progressive SHE Violation

- ✓ A Progressive SHE Violation is an infraction of the project SHE rules that occurs when the infraction is not likely to cause death, serious physical harm, major equipment damage, or Work stoppage.

- ✓ A SPCC employee who commits a Progressive SHE Violation shall be given a documented oral reprimand by SPCC. A second Progressive SHE Violation to the same employee requires that the employee be given a written reprimand by CONTRACTOR. The employee shall be removed from the Worksite by CONTRACTOR should the employee be guilty of a third Progressive SHE Violation, provided that the third Progressive SHE Violation occurs within one (1) year of the first. It is not necessary for the Progressive SHE Violations to be identical for the progressive steps of discipline to apply.

46 SHE PENALTIES

SHE is a prime concern and responsibility of PTTLNG and SPCC. PTTLNG's SHE Review Committee will investigate poor safety performance where areas have achieved 80% and below for two consecutive weeks in the Weekly Area Assessments to determine the cause for the poor performance. The committee will also investigate poor safety performance in terms of daily inspection and high incidence of incidents. SPCC will be advised in writing of the committee's findings. Should the Safety Committee determine that continuous poor safety performance is a result of inadequate, poor or insufficient field supervision and/or safety personnel, PTTLNG will instruct SPCC to replace the supervision and/or safety personnel or, provide additional field supervision and/or safety personnel. CONTRACTOR shall adhere to the findings of the committee and provide the replacement or additional field supervision and/or safety personnel within seven days of the written notification. CONTRACTOR may request the Safety Committee in writing to review the need for additional field supervision and/or safety personnel and be relieved from the requirement for additional personnel when CONTRACTOR has achieved consistently above 90% in the Weekly Area Safety Assessments for a minimum period of two months or has implemented programs successfully to prevent poor performance.

This document is the property of SPCC who will safeguard its rights according to the civil and penal provisions of the Law.

47 REQUEST REMOVAL OF CONTRACTOR PERSONNEL

If resolution does not occur, PTTLNG shall notify the SPCC's home office, with a copy to field office, by registered mail, return receipt requested, of PTTLNG's intent to direct the removal of the SPCC's specific Project Management.

48 SAFETY INCENTIVE PROGRAM

SPCC shall participate in the Safety Incentive Program of the PTTLNG for this project, which is designed to achieve competition between CONTRACTORs and to benefit the people. SPCC shall submit SPCC's Safety Incentive Program to PTTLNG for review and approval. SPCC's program must drive safe behaviors and be based on the SHE performance scoring of the weekly area safety assessments of each individual supervisor and his crew's work areas. The scoring for the purposes of the incentive program should also include scoring tabulation for SHE initiatives and leading indicators. The program must be designed to recognize good SHE performance and safe behaviors and monthly awards to best performing supervisor and crews. CONTRACTOR's senior site personnel are required to drive the incentive program and actively participate in the recognition and awards process.

49 SECURITY

A. SPCC shall be responsible for the security of its own facilities including material, vehicles, tools, equipment, and any other possessions of CONTRACTOR. PTTLNG does not assume responsibility for CONTRACTOR's material, equipment, tools, vehicles or facilities on the project.
B. CONTRACTOR will control access at all the gates and entrances to the project Worksite 24 hours a day, 7 days a week. CONTRACTOR and its employees shall apply for access passes for all employees, vehicles and equipment to enter the project site.
C. SPCC and it's SUBCONTRACTOR shall complete the project application forms completely and correctly and submit all supporting documentation to the SPCC SHE team via their designated representative for review and processing.
D. After processing CONTRACTOR's completed documentation, SPCC SHE team will issue numbered, ID badges to SPCC employees once they have received safety indoctrination, security induction and other required training. Vehicles and equipment will only be issued access passes after completing and submitting access applications and passing all safety and legal requirements which includes an inspection of the vehicle.
E. SPCC will charge to replace any lost ID badges of SPCC's employee and per ID badge for each week per ID badge not returned upon employees demobilization or termination from the project.
F. SPCC shall ensure access passes and ID badges are properly displayed and visible at all times and present it to CONTRACTOR Security at the access gates and site entrances or upon instruction.

This document is the property of SPCC who will safeguard its rights according to the civil and penal provisions of the Law.

G. SPCC shall organize the standard form of material gate passes and have them approved and presented at PTTLNG's Security gates for all material and equipment entering or exiting the gates.

SPCC and SUBCONTRACTOR shall obtain from SPCC a visitor's pass for each visitor who wishing to visit the SITE.

A. SPCC shall immediately notify PTTLNG of all thefts or other security violations at the jobsite or project. CONTRACTOR shall also submit to PTTLNG a monthly summary of thefts or other security violations.

B. No firearms, dangerous weapons or any item deemed illegal under Thailand's Law are allowed on the jobsite.

C. Only PTTLNG approved cell phones will be permitted on the site. No cell phones with built-in cameras are permitted.Use of photographic equipment inside the project or photographing any part of the project, security personnel or post is strictly forbidden without specific approval of PTTLNG. No photographic or any other imaging devices will be allowed on the project without proper approval of the PTTLNG. Any unauthorized imaging devices found will be confiscated and the proper authorities notified.

50 PROTECTION OF WORKERS, THE PUBLIC, ASSETS AND ENVIRONMENT

SPCC shall protect the safety and health of workers and people living or working near the activity from potential hazards and risks carried out by that activity. SPCC, without cost to PTTLNG, shall take all necessary precautions and mitigation measures to protect the workers and the public and minimize disturbance and inconvenience to the public resulting from performance of the WORKS.

Throughout performance of WORKS, SPCC shall execute the WORKS and conduct all operations in such a way as to minimize any impact upon the natural environment, including compliance with all LAWS, PERMITS, and rules applicable to the WORKSITE, e.g. ENVIRONMENTAL MANAGEMENT PLAN, Environmental Impact Assessment (EIA), EIA approval conditions and authorities etc.

SPCC shall agree to indemnify PTTLNG and consultants of PTTLNG for all claims, damage costs and penalties relating to any environmental damage or loss or non-compliance with any LAWS or PERMITS arising out of SPCC and/or SPCC SUB-CONTRACTOR performance of WORKS.

51 ATTACHMENT

More details of related SHE procedures are wrapped in attachment here for all personnel reference.

Att. no.	Page no.	Title of SHE procedure
Attachment 2	pp.62 ~ pp.66	Dust control procedure
Attachment 3	pp.67 ~ pp.105	Fall prevention & protection program
Attachment 4	pp.106 ~ pp.115	Fire prevention in construction procedure
Attachment 5	pp.116 ~ pp.133	Gas cylinders storage, transportation & use procedure

This document is the property of SPCC who will safeguard its rights according to the civil and penal provisions of the Law.

Attachment 6	pp.134 ~ pp.141	Grinding works procedure
Attachment 7	pp.142~pp.156	Handling radioactive source procedure
Attachment 8	pp.157~pp.167	Heat stress prevention procedure
Attachment 9	pp.168~pp.174	Housekeeping procedure
Attachment 10	pp.175~pp.181	Hydro testing procedure
Attachment 12	pp.190~pp.220	Leading indicator system
Attachment 13	pp.221~pp.226	Lighting for construction works
Attachment 14	pp.227~pp.249	Manual handling procedure
Attachment 15	pp.250~pp.259	Marine works procedure
Attachment 16	pp.260~pp.267	Noise
Attachment 17	pp.268~pp.272	Painting works
Attachment 18	pp.273~pp.286	Pneumatic test
Attachment 19	pp.287~pp.300	Safe transportation
Attachment 20	pp.301~pp.306	Site preparation
Attachment 21	pp.307~pp.318	Warning signs
Attachment 22	pp.319~pp.330	Welding operations
The below		

1	SHE Training Procedure
2	Environmental Procedure
3	PPE Management Procedure
4	Confined Space Procedure
5	Crane, Rigging and lifting, Scaffolding, Excavations work safe
6	Hazardous Chemicals and Substance Procedure
7	Emergency Preparedness and Response Procedure
8	Hand Tools and Machinery Safety Procedure
9	Work Permit Program
10	SHE audit and inspection management Procedure
11	Incident/accident investigation and notification Procedure
12	Simultaneous Operation Procedure
13	SHE Action Tracking System Procedure
14	SHE risk management and JSEA procedure
16	SHE Manual for Construction
17	KPI and SHE Performance Monitoring and Reporting procedure
18	Alcohol & Drug testing procedure
19	SHE Manual and procedures for Commissioning and Start Up
20	SHE Pre Start-Up Audit Procedure

This document is the property of SPCC who will safeguard its rights according to the civil and penal provisions of the Law.

PTTLNG Nong Fab LNG Receiving Terminal Project

SAIPEM SPCC Joint Venture

SHE PLAN FOR COMMISSIONING AND START UP

DOC CLASS Z2

[redacted]

REV.	STATUS	DATE	REVISION DESCRIPTION	BY	CHK.	APPR.

CONTENTS

1. INTRODUCTION 5
1.1. Objectives of the Document 5
1.2. Reference Documents 5
1.2.1. International standards 5
1.2.2. PTTLNG Documentation 6
1.2.3. Local regulations 6
1.2.4.Project references 6
1.2.5.Contractor Corporate References 7

2. DEFINITIONS AND ABBREVIATIONS 8

3. ROLES AND RESPONSIBILITIES 9
3.1.Project Director 9
3.2.Contractor Site Manager (SM) 9
3.3.Project SHE Manager (PSHEM) 11
3.4.Project Deputy SHEM 12
3.5.Commissioning Manager (COM) 15
3.6.Commissioning Lead 16
3.7.Commissioning Superintendent 16
3.8.Commissioning SHE Coordinator 17
3.9.Commissioning Focal Point (Sub Contractor) 17
3.10.Vendors 18
3.11.Site SHE Organization 18

4. DOCUMENT UPDATING AND DISTRIBUTION 19

5. SHE POLICIES 19

6. PROJECT KPIS AND TARGETS 22
6.1.Targets for Trailing Safety & Environment KPIS 22
6.2.Targets for Leading Safety & Environment KPIS 23
6.3.Targets for Medical KPIS 23

7. SHE MANAGEMENT SYSTEM 24
7.1.The SHE Management System In The Project Development 24
7.1.1.Assessment and Planning 24

7.1.2.Implementation and Operation 24
7.1.3.Controls and Corrective Actions 25
7.2.SHE Objectives 25
7.2.1.Objectives Management Review 27
7.3.Leadership and Commitment 27
7.3.1.Leadership In Health And Safety Program (LiHS) 28
7.3.2.Contractor Life Saving Rules Campaign 30
7.3.3.Keep Your Hand Safe 32
7.3.4.Dropped Object 33

8. SHE ACTIVITIES 34
8.1.Activities Overview 34
8.2.Main SHE Deliverables 35
8.2.1.SHE Plan for Commissioning and Start Up 35
8.2.2.SHE Risk Assessment for Pre-Commissioning and Commissioning 35
8.2.3.Job Safety Environment Analysis 37
8.2.4.Emergency Response Plan for Commissioning 38
8.2.5.Waste Management Plan for Commissioning (WMP) 39
8.2.6.SHE Training and Information Program 40
8.2.7.As-Built Report 42
8.3.SHE Meetings 42
8.3.1.SHE Committee Meeting 42
8.3.2.Weekly SHE Meeting 44
8.3.3.Weekly Workforce Tool Box Talks (TBT) 45
8.3.4.Daily Job Specific SHE Talks 45
8.3.5.PTW Coordination Meeting 45
8.3.6.Other Meetings 46
8.3.7.Project Meeting Recap Table 46
8.4.Identification Areas and Access Control 48
8.5.Tags and warning signs 50
8.6.Training Program 52
8.7.Permit to Work System 53
8.8.SHE Initiatives and Communication Means 53
8.8.1.SHE Alerts/Bulletins 53
8.8.2.Notice Board 53
8.9.SHE Incentive Scheme 53

8.10.SHE Penalty Scheme 55
8.11.SHE Inspections and Audits 55
8.11.1.SHE Inspections 56
8.11.2.SHE Audits 58
8.12.Incident Investigation, Reporting & Follow-Up 60
8.13.SHE Performance and Reporting 61
8.13.1.Safety Data 62
8.13.2.Environmental 62
8.13.3.Implementation and Monitoring 62
8.14.Other SHE Aspects 63
8.14.1.Management of Work Interferences 63
8.14.2.Simultaneous Operations (SIMOPS) 64
8.14.3.Occupational Hygiene 64
8.14.4.Alcohol and Drugs 65
8.14.5.Smoking 65
8.14.6.Driving Risks 66
8.14.7.Stop Work Authority. Unsafe Conditions & Acts 67
8.14.8.Languages Requirements 67
8.14.9.Specific PPEs for commissioning and start up 68
8.14.10.Tools and Communication devices 68

9. PREPARATION OF COMMISSIONING ACTIVITIES 68

10. LIST OF COMMISSIONING AND START UP APPENDIX 69

1. INTRODUCTION

1.1. Objectives of the Document

This Plan is the main document for the application of the Health, Safety and Environment Management System (SHE MS) during the Pre-Commissioning, Commissioning and Start Up phase of the Project.

Its purpose is define the programs that shall be developed to enable the Contractor management to effectively sustain its commitment to SHE throughout the Pre-Commissioning, Commissioning and Start Up phases.

Ensure the Health and Safety of the people and protection of the Environment throughout each phase of the Project will be a management responsibility and a prime consideration in all operations and activities undertaken under Contractor responsibility.

Scope of this document is:

- Identify and comply with all applicable SHE Local Laws, Project Standards and Contractual requirements, to ensure that the Project complies with them;
- Ensure the application of the Contractor Health and Safety Management System;
- Define the SHE organization of the Project;
- Define the SHE objectives of the Project;
- Define the SHE deliverables foreseen for the Project;
- Define the SHE activities will be carried out during the Project execution, in order to reach the SHE objectives and meet the identified requirements;
- Define SHE data to be monitored and reported (number of injuries, number of SHE meetings, number of spills etc.) in order to immediately correct any deficiency of the System so ensure the continuous improvement of the SHE performance.

1.2. Reference Documents

The references the present document and to collect additional information are:

1.2.1. International standards

- SHE documents issued by OSHA, the Occupational Safety and Health Administration (United States of America);
- SHE documents issued by OGP, The International Organisation of Oil & Gas Producers;
- ISO 45001: Occupational health and safety management systems, Requirements with Guidance for Use;
- ISO 14001: Environmental Management Systems - Requirements with Guidance for Use

1.2.2. PTTLNG Documentation

	Ptw System for Commissioning and Start Up
1602088-32016-CV-TS-003-F0	Specification for Drainage System
1602088-32016-GE-005-F0	PROJECT Reference Codes and Standards
1602088-32016-MG-TS-004-F0	Specification for Acoustical Insulation
1602088-32016-PM-GE-001-F4	PROJECT Procedures and Administrative Requirements (General PROJECT Requirement) Section 9. SHE
1602088-32016-PM-GE-008-F0	List of Documents to be Submitted During Detail Design for Each Discipline. Appendix F. Section 1.5 SHE
1602088-32016-PM-GE-015-F0	Site Safety and Security Procedure (Template)
1602088-32016-PM-GE-019-F0	Change Procedure
1602088-32016-PM-GE-028-F0	Environmental Impact Assessment (EIA). Appendix E-1 REPLACED by the Approved EIA
1602088-32016-PM-RPT-103-F0	PTT Environmental Management Plan
1602088-32016-PM-RPT-104-F0	PTT Personnel Protection
1602088-32016-PM-RPT-105-F0	PTT Environmental Specification
1602088-32016-PM-RPT-106-F1	PTT SHE Legislation
1602088-32016-PM-RPT-109-F1	PTT Corporate Worksite Health, Safety & Security Requirements
1602088-32016-PM-RPT-110-F0	PTT Corporate SH&E Pre-Qualification Expectations
1602088-32016-PM-RPT-111-F0	PTT Corporate Work Site Environmental Requirements
1602088-32016-PM-RPT-113-F0	PTT Safety and Health Management Plan
1602088-32016-CS-RPT-024-F0	Guideline for SIL Study
1602088-32016-CS-RPT-025-F0	Safety Requirement Specification (SRS)
1602088-32016-PM-RPT-009-F2	QRA Report

1.2.3. Local regulations

- All site activities shall be in compliance with all relevant SHE local laws, decrees and regulations.

1.2.4. Project references

122018-SPCC-C-SH-PR-0039	Emergency Preparedness and Response Plan for Commissioning
122018-SPCC-C-SH-PR-0040	Waste Management Plan for Commissioning
122018-SPCC-C-SH-PR-0002	SHE Procedures (detail sect 3.2.1)
122018-SPCC-C-SH-PR-0003	SHE Training procedure

122018-SPCC-C-SH-PR-0004	Environmental Management Procedure
122018-SPCC-C-SH-PR-0005	Health Management Procedures and Planning
122018-SPCC-C-SH-PR-0006	PPE Management procedure
122018-SPCC-C-SH-PR-0007	Confined Space Procedure
122018-SPCC-C-SH-PR-0008	Crane, Rigging and lifting, Scaffolding, Excavation work safe Procedure
122018-SPCC-C-SH-PR-0009	Hazardous Chemicals and Substance Procedure
122018-SPCC-C-SH-PR-0011	Hand Tools and Machinery Safety Procedure
122018-SPCC-C-SH-PR-0013	SHE AUDIT procedure
122018-SPCC-C-SH-PR-0014	Incident Notification and Investigation procedure
122018-SPCC-C-SH-PR-0015	Simultaneous Operation Procedure
122018-SPCC-C-SH-RPT-0016	SHE Action Tracking System Report
122018-SPCC-C-SH-PR-0017	Emergency Preparedness and Response Plan for construction
122018-SPCC-C-SH-PR-0018	SHE RISK Assessment and JSEA procedure
122018-SPCC-C-SH-PR-0019	Safety Health Environment Policy
122018-SPCC-C-SH-PR-0020	SHE Requirements for SUBCONTRACTOR and Vendors
122018-SPCC-C-SH-PR-0022	Alcohol & Drug Policy
122018-SPCC-C-SH-PR-0024	Environmental Monitoring Plan
122018-SPCC-C-SH-PR-0025	Spill Contingency Plan
122018-SPCC-C-SH-PR-0029	Security Plan
122018-SPCC-C-SH-PR-0032	Environmental Management Plan
122018-SPCC-C-SH-PR-0037	SHE Monthly Report
122018-SPCC-C-SH-PR-0024	Environmental Monitoring Plan

1.2.5. Contractor Corporate References

STD-COR-SHE-103	SHE Risk Management
STD_GR-GROUP-SHE-005	Emergency and Crisis Management
STD-COR-SHE-117	SHE Audit
STD-COR-SHE-112	SHE Work Permits
STD-COR-SHE-109-E	SHE Competence, Training and Awareness
STD-COR-SHE-109	SHE Competence, Training and Awareness
	Contractor Life Saving Rules (LSR)
	Leadership in Health and Safety" (LiHS)

2. DEFINITIONS AND ABBREVIATIONS

The abbreviations and definitions listed; when used in this document will have the meanings described here.

Corporate	All Functions and Departments of Contractor with the role of guiding and controlling, for the whole Group, the relevant processes, issues and aspects that are necessary for corporate governance
Sector	The whole of a Division or Lead Company and all of the Subsidiaries and Branches that report to it
SHE MS	Part of the company management system which includes the organisational structure, planning activities, guidelines, standards and principles for developing and implementing the SHE policy, establishing and achieving SHE and social objectives and implementing continuous improvement in the SHE risk management process
Subcontractor	Company involved in the execution of prescribed works under a contract with the Contractor
PTTLNG	PTTLNG
PROJECT	NongFab Lng Receiving Terminal Project
CONTRACTOR	SPCC JV
ALARP	As Low As Reasonably Practicable
EMP	Environmental Management Plan
EPC	Engineering, Procurement, Construction & Commissioning
ERP	Emergency Preparedness and Response Plan for Commissioning
FSHEM	Contractor Field SHE Manager
HAZOP	Hazard and Operability
HRA	Health Risk Assessment
SHE	Health, Safety & Environment
JSEA	Job Safety Environment Analysis
LiHS	Leadership in Health & Safety
MERP	Medical Emergency Response Plan
PD	Contractor Project Director
PSHEM	Contractor Project SHE Manager
SM	Contractor Site Manager
COM	Contractor Commissioning Manager
RA	Risk Assessment
SIMOPS	Simultaneous Operations Analysis

WMP	Waste Management Plan
LOTO	Lock out tag out
LNG	Liquified Natural Gas
PTW	Permit to Work
LSR	Life Saving Rules


Confined Space


By passing Safety Control


Driving


Energy Isolation


Hot Work


Line of Fire


Safe Mechanical Lifting


Work Authorisation


Working at Height

3. ROLES AND RESPONSIBILITIES

3.1. Project Director

The overall Project Director/Project Manager ensures the achievement of established project health and safety objectives assigned.

The Project Director/Project Manager function includes:

- representing Contractor with the PTTLNG, Licensors, Partners and Subcontractors, and managing all the SHE contractual aspects;
- ensuring the review of SHE contractual documents;
- defining SHE project strategies;
- supervising site activities;
- supervising project activities regarding aspects relating to health, safety protection of the environmental and local communities, through the project organization positions;
- promoting LiHS, Life Saving Rules, Keep Your Hand Safe and Dropped Object campaigns implementation during project execution;

3.2. Contractor Site Manager (SM)

The SM ensures the performance of pre-commissioning, commissioning and start up activities carried out on a direct hiring basis or manages the pre-commissioning, commissioning and start up works carried out by

subcontractors, ensuring that time, cost, quality, health, safety and environmental protection requirements for the pre-commissioning, commissioning and start up activities are met.

Duties include:

- participating in project planning and scheduling, liaising for this purpose with other organisations and functions involved in executing the project and assuring the most suitable solutions in terms of assembly sequences, works scheduling, constructability, etc, in accordance to project SHE procedures;
- checking that the procedures defined for site activities are developed considering all the SHE risks;
- coordinating and supervising the works carried out on a direct hiring basis or by subcontractors and validating their accounting, supported by the DS positions.
- Ensuring that all the activities are carried out with project SHE Permit to Work procedure;
- Participate to the weekly SHE Management Meeting and Management Safety Walk; ensure the participation also of the relevant DS;
- Ensure that the activities are performed in accordance to the Methods Statement and relevant Risk
- Assessment and/or Job Safety Environment Analysis;
- Participate to the Incident Investigation whenever required.
- representing, insofar as within remit, the CONTRACTOR with PTTLNG, Licensors, Partners and SUBCONTRACTORs, and also managing all the SHE contractual aspects;
- ensuring, insofar as within remit, the review of SHE contractual documents;
- ensuring compliance with applicable and/or local SHE laws and regulation,
- undertaking a leadership role in the SHE process;
- Chair the site safety Committee dealing directly with the SHE Officer in professional level nominated for the project.
- setting standards for safe and healthy execution of pre-commissioning, commissioning and start up works, and ensure full dedication by all personnel to Zero Accident Tolerance;
- ensuring that all line management and supervision conduct their duties in a manner which supports the Zero Accident Tolerance philosophy;
- ensuring the safe and healthy completion of all pre-commissioning, commissioning and start up activities;
- ensuring sufficient resources are available, in terms of equipment and qualified personnel, to effectively manage SHE issues;
- ensuring that all site personnel are competent, qualified and adequately trained to perform duties given to them during the course of the pre-commissioning, commissioning and start up phase;
- ensuring the provision of adequate fire prevention and protection measures and equipment;

- ensure that basic site medical facilities (first aid) and medical support are in place before and throughout constriction activities;
- ensuring that the project ERP is fully implemented;
- ensuring that CONTRACTOR line management participates, contributes actively and exercises leadership in its respective individual and collective project safety meetings;
- ensuring the CONTRACTOR PPE needs are adequately funded;
- ensuring that every work activity performed by the SUBCONTRACTOR, vendors and suppliers (if any) is executed in a safe and controlled manner;
- establishing and maintaining a direct line of communication with the CONTRACTOR Field SHE manager (FSHEM);
- implementing an employee incentive scheme;
- conducting unscheduled meetings as necessary at his discretion or on request of the CONTRACTOR Field SHE Manager (FSHEM);
- supporting “accident reporting” motivation;
- implementing LiHS and Life Saving Rules campaigns during the execution of the project;

Note: in case SM is temporary not be available at Site, he will nominate a substitute and will communicate it to all concerned.

Site Manager is responsible for the interfaces with:

- PTTLNG
- Police, Civil defence and Hospital;
- Local Authorities, Municipality;
- SUBCONTRACTORs;
- Suppliers and Vendors.

Site Manager case by case availes himself of the support of the Community and Interface Manager

3.3. Project SHE Manager (PSHEM)

The project SHE Manager (SHEM), reporting to the senior position in the overall Project Director (PD), shall manage and supervise Project activities within their remit relating to health, safety and the environment during Project development phase, ensuring that the SHE MS is correctly applied.

- Pre-commissioning, commissioning and start up’s phase duties include:
- definition of Project SHE objectives in accordance with PTTLNG and CONTRACTOR SHE Policy and contractual requirements;

- ensuring preparation and the first release of the SHE Plan for pre-commissioning, commissioning and start up phase;
- coordinate and lead SHE Audit and Review activities for the project (Home Office and site);
- be the prime SPCC contact for SHE matters.

3.4. Project Deputy SHEM

Deputy SHE Manager acting as SHE Manager during his absence at site, reports to the senior position at site Site Manager (SM), he shall manage and supervise Project activities within their remit relating to health, safety and the environment during all Project phases, ensuring that the Project SHE MS is correctly applied.

- assisting commissioning teams in Risk Management and Occupational Safety Risk Assessment;
- ensuring that CONTRACTOR SITE Manager (SM), Commissioning manager (CM) and Discipline Superintendents (DS) are supported in the field controls of CONTRACTORs/Suppliers with regard to SHE aspects;
- ensuring the qualification of the set of authorization processes relevant to SHE areas required for the site (e.g. water discharges, waste, etc.) and responsibilities for their implementation;
- updating the specific site's SHE Plans, and procedures and checks that they are correctly implemented by CONTRACTOR and SUBCONTRACTOR personnel throug periodic audit at site.
- Checking all SUBCONTRACTOR's documentation in order to meet the PTTLNG requirement for the pre-commissioning, commissioning and start up activities.
- Assuring weekly checks of safety conditions and monthly checks of work equipment and protective devices;
- defining emergencies scenarios, Emergency Response Plans and arrange emergency drills;
- Update and check the CONTRACTORs' SHE Plan pre-commissioning, commissioning and start up and submits them to the CONTRACTOR Site Manager (SM) for approval;
- providing information and training of PTTLNG personnel and CONTRACTOR managers responsible for SHE;
- participating in the analysis of the causes of any accidents or injuries and also ensures the collection of data;
- supporting Project Director for the implementation of LiHS and Life Saving Rules campaigns at site.
- Verify the reports coming from the SHE Officers/Engineers
- Verify and issue the SHE Monthly report according to the contratual information required by 7th day of each month to PTTLNG through the CONZOL system.
- Ensure the CONTRACTOR internal reporting according to Annex 1 by the 1st week of each month;
- ensure that reporting of mandatory SHE matters to the appropriate regulatory.
- authorities is timely and accurate.

- liaise with the SUBCONTRACTORS' SHE Manager(s);
- notifying the SHEM and the SM, of any SHE related incident/accident involving personnel, equipment, property or environment;
- DSHEM is responsible for deliver SHE documents and information at site to SUBCONTRACTORS and requests to them to sign on the first page of each document shared in order to onfirm the receipt.

for the Emergency Response Plan:

- report SHE incidents immediately to the SM;
- ensure plan update (scenarios, names, numbers, positions etc) and exist for dealing with potential emergency situations;
- ensure SUBCONTRACTORS have appropriate fire prevention procedures in their SHE documents, and that they apply them;
- investigate injury, damage and near miss, accidents independent of SUBCONTRACTORS
- SHE Manager and/or jointly with them.

for the SHE Meetings the deputy SHE manager:

- prepare and minute the Site Management Safety Meeting;
- organise, attend and participate in relevant SHE Meetings (Supervisor's Safety Meeting);
- support supervisors and foremen with specific meeting format and content as necessary;
- generate a monthly log of meetings scheduled, meetings held, topics and attendance and submit the log to the SHEM and the SM.

He/She shall conduct regular site SHE Audits, Reviews and Inspections according to this plan. The objectives are detailed in the following:

- check implementation/compliance with the SHE documentation (updating and
- reviewing, as required);
- conduct regular Inspections;
- check the implementation, content, participation and effectiveness of specific dedicated meetings (see 8.3 sections) verifying compliance with SPCC SHE requirements;
- examine accident reports, perform statistical analyses and publicise the results as necessary;
- prepare a monthly SHE reports, collecting all informations from all SUBCONTRACTORS and CONTRACTORS department, for the SHEM and the SM review (SHE Monthly Report Forms as per Annex1 by the 1st week of each month, and the SHE Monthly report for PTTLNG 122018-SPCC-C-SH-PR-0037 by the 1st week of each month).

- DSHEM manager ensure a full set of information for the EIA compliance to mitigation measures for pre-commissioning, commissioning and start up implemented into the SHE Monthly report for PTTLNG.

for the Training shall:

- ensuring that all personnel involved with pre-commissioning, commissioning and start up activities, including SUBCONTRACTORS and VENDORS (if any), are adequately instructed of the Project SHE Requirements;
- ensure training of all site personnel (on SHE matters) at any level of the project structure (SPCC Induction and trainings);
- arranged SHE training sessions (and specific training prior to start any work activity).

for the PPE shall:

- ensure compliance with local law or more stringent standards, contract, procedures, relating to the provision and use of PPE.

for the Hazard Management shall:

- ensure that all personnel are aware of the SHE requirements of their activities;
- manage the waste streams, compile and issue of documents and reports required in accordance with the Waste Management Plan and the EIA;
- plan and carry out, when necessary, studies and/or hazard analyses.

The SHEM / DSHE Manager avails himself of the collaboration of the:

- Safety Manager by Law, (CONTRACTOR SHE COORDINATOR)
- Environmental Specialist, and
- Security Coordinator.

for the following duties:

- Assure that all THAI laws, requirements are all implemented and tailor the SHE Management System under THAI law requirements.
- Coordinate all SHE and Security activities giving full support and consultant to the SHEM/DSHEM.
- Stop all work when THAI SHE and/or Security laws are not respected

OHS&E Trainer shall:

Prepare and organize SHE Induction, develop and implement a training programme covering aspects such as abrasive wheels, enclosed spaces, breathing apparatus, harnesses, driving, etc, in line with Project Risk assessment results.

OHS&E Trainer shall keep the records and tracking system for the training and communicate on monthly base the relevant information for the monthly report to the DSHEM.

OHS&E Trainer ensure that personnel are aware of:

- SPCC and PTTLNG organisation and principal personnel;
- All employee SHE responsibilities under SPCC and PTTLNG rules;
- project SHE Policy and objectives;
- education and training programme;
- Health, Safety and Environmental practices;
- foreman's tool box talks;
- SHE information communication programme;
- SHE incentive programme;
- SHE discipline programme;
- Reporting hazardous conditions;
- other matters as necessary, housekeeping and sanitation procedures;
- Risk assessments.

Duties for other Environemental, Health and Security functions have been reported within the relevant documentation.

3.5. Commissioning Manager (COM)

The COM manages pre-commissioning, commissioning and start up activities, ensuring compliance of the activities within own area of responsibility with the established process and SHE requirements, while respecting the relevant time and cost targets. And submit "daily report" on everyday basis to PTTLNG as per 1602088-32016-PM-RPT-107 PTTLNG Pre-Commissioning, Commissioning and Acceptance Requirements.
Duties include:

- Has overall responsibility for coordinating all site wide Pre-commissioning & Commissioning and Startup activities.
- preparation and keeping up to date, consistent with the other project plans and schedules, the integrated pre-commissioning, commissioning, start-up and test run Plan, defining operating procedures, logistics, activity scheduling, tools and control methods;

- participation in project review meetings in order to make sure that the pre-commissioning, commissioning and start up requirements have been duly complied with;
- preparation of documents and procedures for pre-commissioning, commissioning, start up and test-run activities, and checking that they are complied with (including the SHE and Social related aspects);
- coordinate with the CM to ensure that potential interference of pre-commissioning, commissioning and start up activities are managed and assessed in proper SIMOPs analysis;
- supervision of the test-run activities, including the measurements and laboratory tests;
- giving proper safety instructions to the Commissioning Team focusing the scope of work;
- ensuring preparation and checking of Purchase Requisitions (PR) and Technical Opinions falling within own area of responsibility;
- ensuring coordination among parties involved in the pre-commissioning, commissioning and start up activities;
- ensuring that all pre-commissioning, commissioning and start up activities are carried out in compliance with SHE specifications;
- Ensures that Project safety policies are set in place and followed.
- Ensures that Project safety procedures are delivered to related parties.
- Coordinates and establishes pre-commissioning, commissioning and start up schedule.
- Coordinates and establishes start up schedule.
- Daily consolidated reports to the Client, PMC and Site Project Manager.
- Defining personnel mobilization.

3.6. Commissioning Lead

- Supports the Commissioning Manager in coordinating all site wide pre-commissioning, commissioning and start up activities.
- Acts as Commissioning Manager when Commissioning Manager is absent from site.
- Reports to the Commissioning Manager.

3.7. Commissioning Superintendent

- Has overall responsibility for executing pre-commissioning, commissioning and start up activities in designated areas.
- Has responsibility for organizing the testing and completion of Sub system to meet acceptance criteria as outlined in the Quality Control Plans within area of responsibility.
- Reports to the Commissioning Manager or his deputy.

- Commissioning Supervisor
- Has responsibility for executing testing and completion of Sub systems to meet acceptance criteria as outlined in the Quality Control Plans within area of responsibility.
- Reports to the Commissioning Manager and/or Commissioning Lead.

3.8. Commissioning SHE Coordinator

- Has responsibility for informing all adjacent work groups what activities are taking place and associated risks.
- Ensures that Tool box meetings are carried out correctly and that all personnel involved in all activities are aware of any risks.
- Assists the Commissioning Focal Point with the preparation of JSEA, barriers and other precautions as outlined in the safety plan.
- Intervenes where necessary to ensure compliance with all safety procedures.
- Instructs Sub Contractor Safety Personnel where necessary to ensure compliance with all safety procedures.
- Reports to the Project SHE Manager and Commissioning Manager where deficiencies can be improved..

3.9. Commissioning Focal Point (Sub Contractor)

- Has day to day responsibility for coordinating pre-commissioning, commissioning and start up activities in support of the Commissioning Team;
- Ensures that correct tools and equipment are available for executing all tasks.
- Ensures that suitably qualified personnel with Supervision are available to provide direct support during all pre-commissioning, commissioning and start up activities.
- Ensures that shift handovers occur (during 24 hour coverage) at the worksite and that a briefing is carried out for the oncoming shift.
- Ensures that communication plan and contact numbers for key personnel are in place.
- Follow the pre-commissioning, commissioning and start up procedures.
- Ensures that all Sub Contractor personnel understand scope of work and their responsibilities.
- Reports to the Contractor Commissioning Manager or his designate.

3.10. Vendors

- During pre-commissioning, commissioning and start up activities, Vendors will be under the direct control of relevant Contractor Comissioning Disciplines.
- All Vendors must supply a schedule before any work can proceed which will then be jointly reviewed by the relevant Discipline and Commissioning prior to the commencement of work.

3.11. Site SHE Organization

The SHE organizational structure is composed of experts who combine the SHE skills typical of engineering with those of plant pre-commissioning, commissioning and start up (SHE Overall Management). These experts are coordinated by the Project SHE Manager which guarantees the proper application of the SHE MS during all the Project phases.

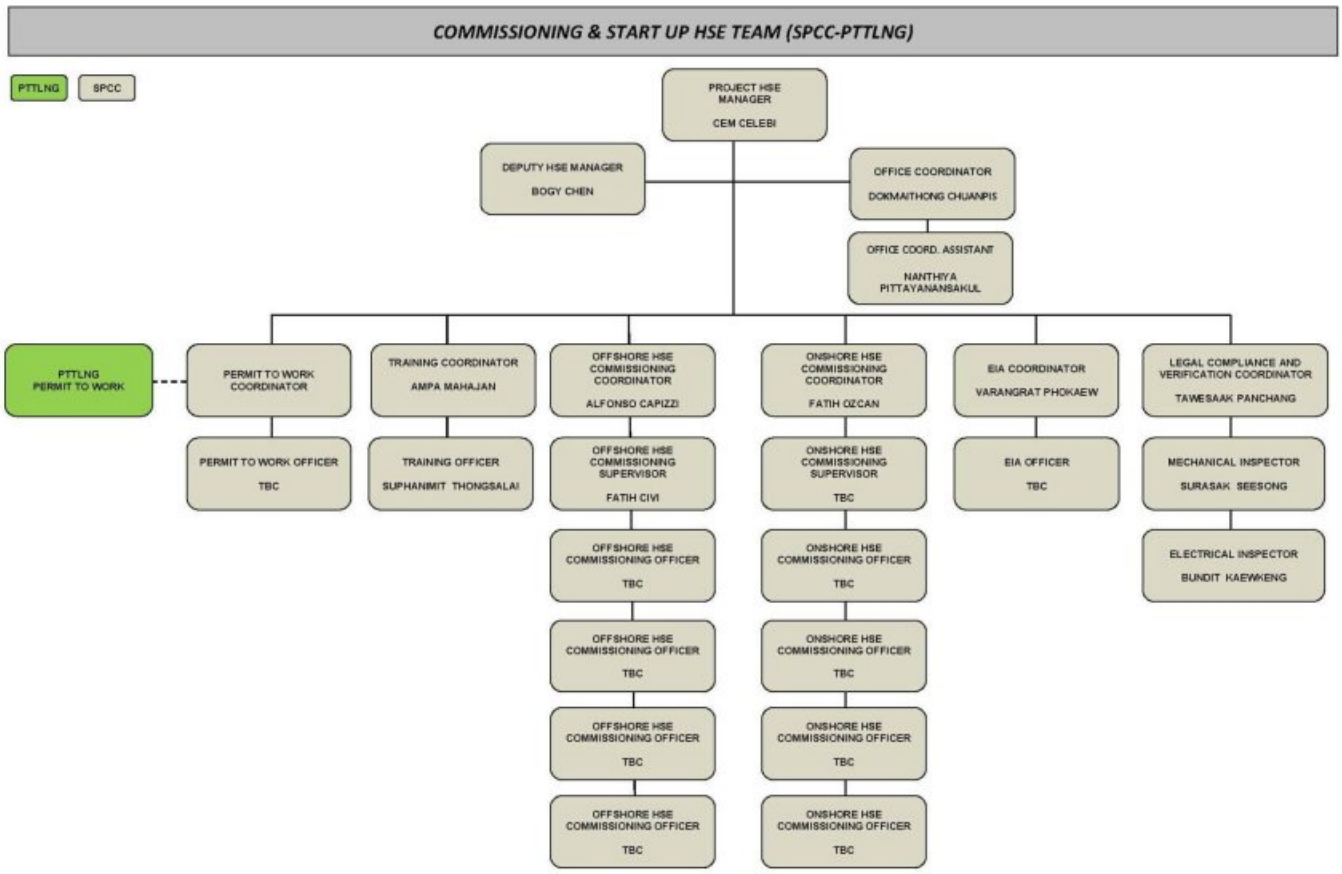

4. DOCUMENT UPDATING AND DISTRIBUTION

This plan is a live document. To ensure its accuracy and consistency, this document will be readily updated and maintained whenever the responsibilities of people involved or the specific scope of work will change. All revisions to this document will be done by Project SHE Manager (PSHEM) and signed by Contractor Project Director for final issue.
The distribution of this document is under the direct responsibility of Contractor Project Director.

The SHE Plan shall be distributed to (if present):

- Contractor Project Director (PD)
- Site Manager (SM);
- Commissioning Manager (COM);
- Commissioning Superintendent;
- Project SHE Manager (PSHEM);
- Project DSHE Manager (PDSHEM);
- Commissioning SHE Coordiantor;
- PTTLNG/PMC;
- Subcontractors (during bidding phase).
- Subcontractors SHE Managers
- Supplier
- Vendors

5. SHE POLICIES



Pre-commissioning, commissioning and start up phase, as well as each phase of the Project, will fully comply with PTTLNG Policy Statements, SPCC SHE Policy Statement.
This policy statement that reflects the commitment of CONTRACTOR's to the protection of the Environment, and the Health and Safety of its personnel and all people that could be affected by its operations, as further detailed in the following sections. The SHE Policy is the basis upon which Project SHE objectives are set.

Through the implementation of our SHE management system, the SPCC management will:

- Prevent accidents resulting from our activities.
- Assess and manage the risk which may arise from our activities for people, assets or
- environment.
- Preserve our employees' physical integrity and preserve environment.

- Meet or exceed the regulatory requirements of the Thai government through strict adherence to all applicable national, provincial and international laws.
- Report our performance against SHE objectives and targets to PTTLNG/PMC.

All SHE activities foreseen for the Project have the aim to implement SHE policy statements.
The Project has issued the following:

- SHE Policy
- Alcohol & Drugs Policy

Use of Alcohol and Drugs on the site shall be cause for immediate dismissal and permanent removal from the site. Testing for drugs and alcohol without cause (at random) or following any undesirable event, accident or near-miss will comply with laws applicable in Thailand.

SAIPEM SPCC Joint Venture

Project SAFETY HEALTH and ENVIRONMENT Policy

Project Direction recognizes the importance to deliver the PROJECT with the highest attention to safety and health of all people in any way interested by the PROJECT and for the environment that is surrounding the project that can be summarize in the motto:

"Safety from Heart"

SCC Joint Venture is fully committed to achieving the highest standard of SHE performances by creating and maintaining a safe work condition for all personnel associated with PTTLNG Nong Fab LNG Receiving Terminal Project. Respect of Safety, Health and Environmental Laws, rules, regulations and International Standards together with the implementation on the SHE Management system, are the keys to achieve project success, continuously promoting a Project-wide culture for SHE also through specific program (LIHS, Life Saving Rules), and by ensuring adequate training to all the involved parties, Prevention and Protection of Safety, Health and Environment is also guaranteed through the application of SECURITY Plan on the Project.

All of us must be aware of our personal impact on safety, health and environment while performing our work at the site as well as on the communities which may be affected by the Project's operation, and ensuring the efficient use of energy and natural resources.

SPCC Joint Venture is fully committed to provide the resources necessary to implement this policy and carry out a strategy of preventing pollution and potential SHE hazards by performing their Identification, Risk Assessment and implement necessary plans and procedures and check regularly their efficacy in order to improve all aspects of workplace Safety, Health and Environment and the protection of on stakeholders in accordance but not limited to the International Standards OHSAS 18001 and ISO 14001.

All resources belonging to management team shall demonstrate to be a leader by example in the field of Health, Safety and the Environment promoting Health and Safe working practices and Environmental protection performing their own activities. The performance evaluation of each project member shall be also based on the SHE performance achieved by the Team effort.

[redacted]

ptt LNG TGES SAIPEM CTCI Discover Reliable SAIPEM SPCC Joint Venture

PTTLNG Nong Fab LNG Receiving Terminal Project

Project Alcohol and Drug Policy

SPCC Joint Venture is fully committed to achieving the highest standard of SHE performances by creating and maintaining a safe work condition for all personnel associated with PTTLNG Nong Fab LNG Receiving Terminal Project.

Management is strongly committed to ensure that personnel employed must not partake at any time, during the performance of the work or be under the influence of any alcoholic liquor, drug or other intoxicating substance, while on duty, other than for bona fide medical reasons.

It is not acceptable to bring substances at site or in any other project location or to be under the influence of alcohol or drugs at work or consume alcohol or drugs this includes paid and un-paid breaks.

Use and/or detention of such items (i.e. Alcohol and Drug) on the site shall be cause for immediate dismissal and permanent removal from the site.

To:

- Ensure that the JV SPCC complies with legislation and Owner's requirement.
- Minimize the risks associated with alcohol and drugs in the workplace

To make an early identification of who may be experiencing alcohol or drug problems specific Alcohol and Drug checks will be performed within the remit of Thailand Law.

Rev. 02 – April 2019

[redacted]

Inside the offices and on site several safety boards will be placed and SHE policies posted on. During induction and training SHE policies will be always empathized and content explained to everybody that has to completely adhere to.

Respect and dissemination of all statements is a Project Management ad SHE Management duty.

6. PROJECT KPIS AND TARGETS

The trailing and leading indicators (KPIs) for Safety & Environment are part of the CONTRACTOR SHE reporting system.

They can also be used for setting measurable target objectives to manage SHE activities or establish safety bonuses for personnel or project.

SHE issues and performance including reporting on progress, reviews, action close out, areas of concern, incidents, mitigation measure implementation and monitoring records required in the EIA report will be part of the monthly SHE report.

Safety stats and KPI shall be also collected for internal use of CONTRACTOR according the forms attached on monthly base.

6.1. Targets for Trailing Safety & Environment KPIS

TRAILING INDICATOR	Project TARGET
Fatality (FTL)	Target = zero
Lost Time Injuries Frequency rate - LTIFR	LTIFR= 0
Total recordable injuries frequency rate (TRIFR)	TRIFR= 0.0226 (PTTLNG requirement)
Road Traffic Accidents (RTA) per 1,000,000 Km driven	RTA = as reported
Waste generation	as defines based on the EIA
Energy consumption	
Water consumption	
Spills	Maximum number of spills (> 100 liters) = zero
SHE deviations notified by third parties	Zero.(Examples of deviations: notification by PTTLNG, complaint by neighboring communities, notification or fine by authorities)

According to the PTTLNG requirements all indicators are referring to 200.000 man hours.

6.2. Targets for Leading Safety & Environment KPIS

LEADING INDICATOR	TARGET
SHE Training hours	Comply with the Project SHE training schedule
Management SHE visits	(by Project management based in CONTRACTOR head offices) Project target 2 per year
Site Management Inspections	(by Site management No SHE) Project target > 1 per week [1/w recommended by PTTLNG]
Pre-job meetings	100 % realized by all teams/shifts
Tool Box Talks (TBT) weekly	100 % realized by all supervisors/foremen
Job Safety Environmental Analysis (JSEA)	Actual number is reported JSEA is required before starting any new job or any new job conditions or any hazardous job
SHE meetings	Comply with the project's Program
SHE Inspection	Comply with the Project SHE Inspection schedule
Undesirable events reported	To measure the number of SHOC cards completed To fix a target can be misleading : maximum of events reported (transparency & control) against minimum of undesirable SHE events)
Near Miss (NM)	To measure the number of NM reports completed. To fix a target can be also misleading
Investigation of notified incidents	100% investigated (including near-misses)
Km. Driven	Actual Km. reported for calculation of RTA frequency

6.3. Targets for Medical KPIS

Health indicators are detailed in the CONTRACTOR procedure and are also part of the CONTRACTOR SHE reporting.

7. SHE MANAGEMENT SYSTEM

Contractor is ISO 45001 and ISO 14001 certified and Contractor SHE MS meet the above mentioned Standards

In accordance with principles stated in the Contractor SHE Policy, the SHE MS is established to ensure that Health, Safety and Environmental issues are comprehensively addressed at all stages of the Project life cycle, and that all design choices and decisions are justified with respect to their implications for Health, Safety and Environment during the following phases of the Project.

7.1. The SHE Management System In The Project Development

The application of the SHE MS to PTTLNG Project is based on four fundamental points:

- Organization;
- Assessment and planning;
- Implementation and operation;
- Controls and corrective actions.

7.1.1. Assessment and Planning

The main activities carried out by the SHE Team in the assessment and planning of the various phases of the Project are:

- the identification of hazards,
- the risk assessment,
- the identification of environmental issues to be kept under control,
- the definition of SHE objectives to be pursued,
- the identification of legislation and SHE requirements to be observed,
- the preparation of SHE deliverables.

These activities also involve specialists from other disciplines and the PD or SM.

7.1.2. Implementation and Operation

In order to achieve the SHE objectives defined in the assessment and planning phase all Project staff will be involved in the activities following described in this Plan.

7.1.3. Controls and Corrective Actions

The proper application of the SHE MS is constantly checked by the Project SHE structure. This is a control which derives from the need to keep to schedule in executing activities and to reduce unforeseen events and risks to people and to the environment.

7.2. SHE Objectives

The main objectives of the Contractor SHE MS are summarized as follows:

- identification of all potential SHE and Social impacts associated with the Project, and application of prevention, control and mitigation measures to eliminate or minimize harm to people, damage to project or equipment, adverse environmental damage and safety of the local communities;
- minimization of the incidents likelihood during all phases of the Project and to guarantee a safe working environment for people, in compliance with the contractual SHE Requirements and Local, National and International Regulations;
- minimizing negative effects on the environment through environmental aspects management and the use of carefully thought out and executed design, procurement and pre-commissioning, commissioning, start up methods;
- promotion in adopting a positive, proactive, committed health, safety and environmental culture throughout all phases of the Project;
- pursuit of continuous improvement by regularly planning, implementing, auditing, and updating the System (i.e. Plan-Do-Check-Act cycle);
- project commitment, and active and visible leadership in promoting the correct application of the Project SHE MS to ensure that all hazards and environmental impact factors related to the Project are identified, their risks and environmental and social impact quantified and appropriate control and mitigation measures are taken to manage them;
- Increasing the SHE culture in the workforce;
- Be always prepared and resourced to manage, contain and de-escalate emergency situations;
- Ensuring continuous improvement through periodic Management SHE Reviews.

In particular, during the execution of the Project will be assured the following specific objectives:

- SHE MS:
  - The SHE MS will be implemented in order to assure the preservation of the ISO 14001 and ISO 45001 certification.

- Periodical Audits will be performed in order to verify the compliance with the applicable laws, Contractor corporate requirements, relevant international standards and the control of the Sub-contractor.
- A specific training program will be developed in order to cover all the training needs of the workforce, ensuring the compliance with the relevant project requirements, laws and regulations, applying where possible the standardized courses available in Contractor Delphi SHE training portal.
- Proper communication between Project staff and the upper levels of Contractor will be ensured in accordance with the relevant Contractor standards and procedures.

- Health:
  - Contractor promoted Health campaigns and programs will be actively sustained and implemented by the Project Team.
  - The repatriation cases of Contractor Employees for medical reasons will be reduced by establishing, as more as possible, well equipped health facilities, manned by highly qualified health professionals.
  - All the Contractor and its Subcontractors personnel involved in the execution of the project will be subjected to a Medical Fitness Examination following the Contractor requirements.

- Safety:
  - The Project management will establish and pursues the Project Annual Safety Performance Targets.
  - Contractor promoted Safety campaigns and programs will be actively sustained and implemented by the Project Team.
  - Incident Investigations outcomes and Project Safety Performance data will be reported and shared within the Contractor in accordance with the relevant Contractor standards and procedures
  - All the possible emergency scenarios will be properly assessed in order to minimize the emergency magnitude. Periodical drills will be performed at Site in order to ensure the prompt and efficient response to all the emergency reasonably foreseeable.

- Environment:
  - Project Team is committed to reduce energy consumptions, increase energy efficiency and, whenever possible, to prefer the use of renewable energy during the Project execution.
  - Natural resources saving (especially for water use) will be strongly promoted and encouraged.

- Environmental and social aspects and impacts related to the Projects activities will be properly assessed and managed.
- The Environmental performance data will be reported and shared within the Contractor in accordance with the relevant Contractor standards and procedures

Further SHE Objectives can be defined at a later stage according with the Project needs.

7.2.1. Objectives Management Review

Project Management will review, at least once per year, the Project SHE MS in order to ensure its continuing suitability, adequacy and effectiveness, giving its feedback to the Contractor Head Office.

Annual Objectives and Targets will be reviewed in the following cases:

- When the targets are failed or not reasonably achievable
- In case of project top management changes
- In any case, at least, once per year.

7.3. Leadership and Commitment

Contractor Project Management will demonstrate strong and visible leadership and commitment concerning Health, Safety and Environment management, and will be directly involved and responsible for the SHE MS implementation.
Project Management will work actively and systematically on SHE issues within the organization, and ensure that all decisions and practices are in line with the principles of the SHE MS.
Such commitment will be transmitted to all the levels from the PD down throughout the organization.

Contractor commitment will be realized through and witnessed by:

- Positive and proactive SHE attitude by the Project Management and the work force;
- Visible management participation in activities as SHE meetings, audits, accident investigations, reviews and hazard identification system;
- Planning and implementation of SHE and social action plans, assessment of results and initiation of corrective actions for continuous improvement;
- Planning and organizing the work in a safe manner prior to executing the tasks, by conducting Risk Assessments for all the operation to be performed and in particular for non-routine and hazardous activities
- Provision of suitable training, supervision, information and instruction to all concerned personnel;

- Regular, active and responsible participation of all personnel in SHE training courses, Job Safety Environment Analysis, Tool-box Meetings, which have to be conducted by suitably qualified SHE personnel;
- Providing safety of the personnel, safe site, equipment, personal protective equipment and safe systems of work;
- Acceptance and accountability of the responsibility for accidents and incidents in the workplaces
- Performing of accident investigation and review of occurred accidents, and further identification of remedial and preventive actions;
- Introduction of systems to encourage all workforce in providing suggestions and proposals for improvements in SHE performance.

7.3.1. Leadership In Health And Safety Program (LiHS)

Contractor has developed an innovative and highly interactive training program with the aim of creating and enforce a strong Safety and Health Culture within the organization starting from the Management: the Leadership in Health and Safety Program (LiHS).

In order to achieve this cultural change, the main objective of LiHS is to begin the improving process of our managers in fully matured Safety Leaders.

A clearly defined top down strategy enables each level of management to become safety ambassadors, sponsoring the next levels in order to touch every manager within the organization, and in addition delivering critical safety messages down to every employee.

In addition to this, an innovative bottom-up approach was developed, which utilizes the 'personal social influence' of selected employees who actively work to instil the 5 leading behaviours into the organization at local levels.

The implementation of the LiHS program will be evaluated by Contractor Management for the Contractor's personnel.

The opportunity to extend the LiHS program to other personnel involved in the Project, if any, will be evaluated according to the PTTLNG requests.

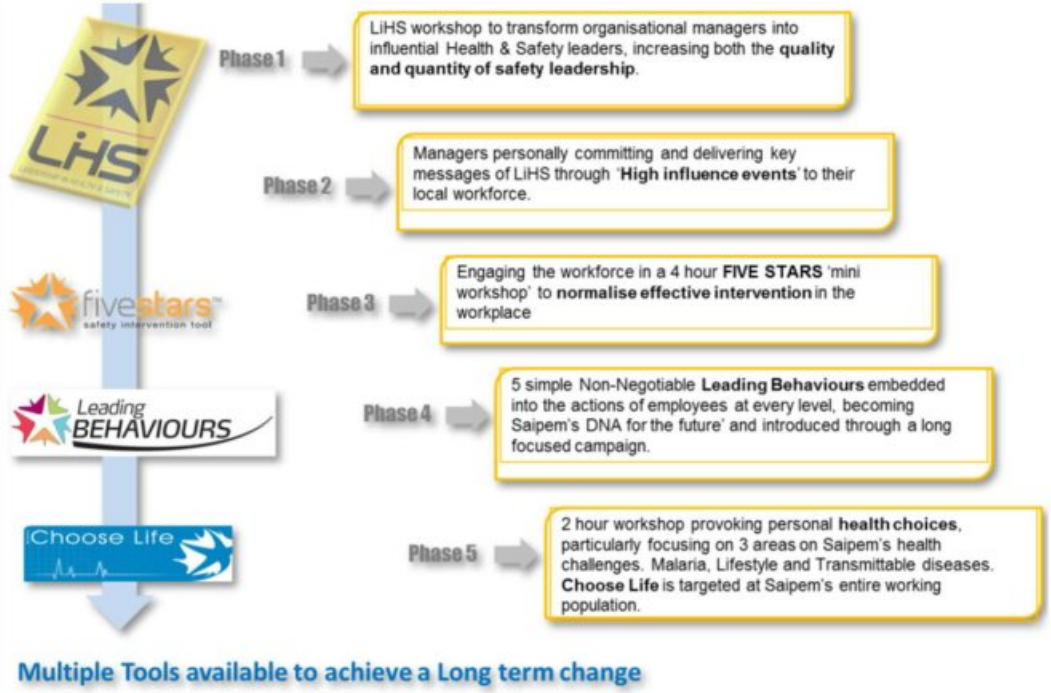

Since the release and integration of the Contractor Health & Safety Vision into our company in 2007 we have collectively made great progresses in improving our safety culture. The vision communicates our ambitions and commitments to achieving this and sets the highest industry standards, through a solid basis of shared health and safety values.

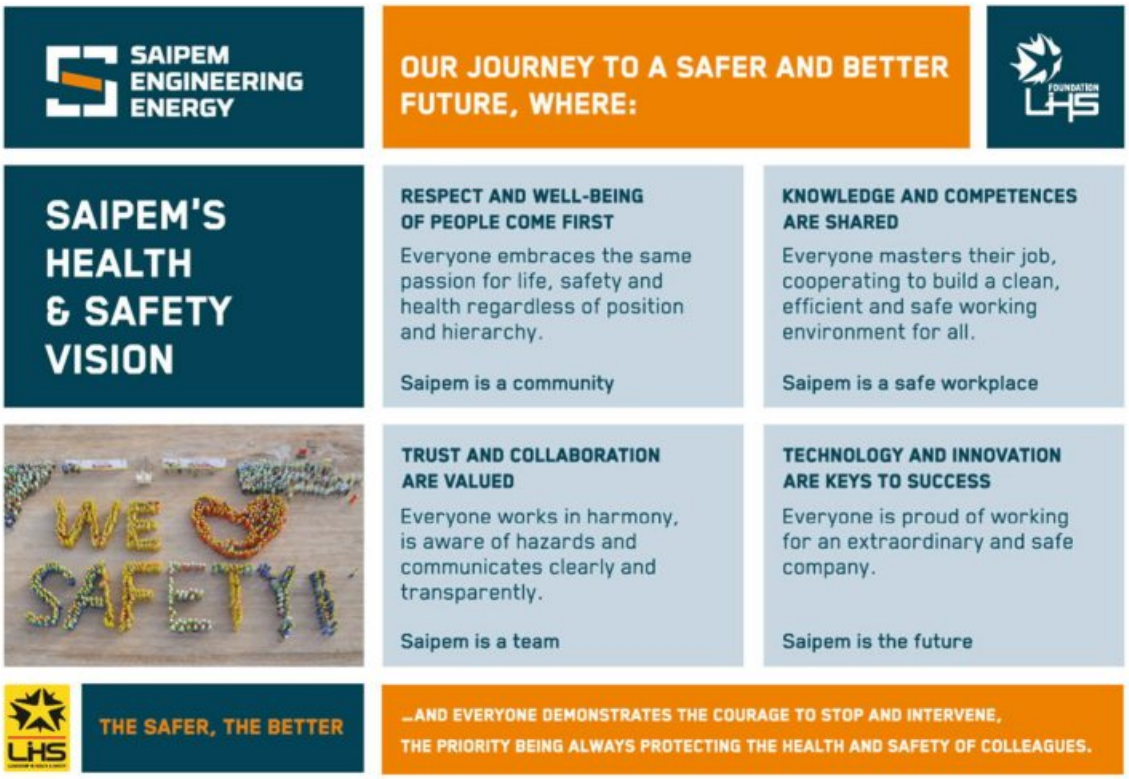

7.3.2. Contractor Life Saving Rules Campaign

Contractor has launched within its organization a new safety campaign, called “Life Saving Rules”. These rules are already present within Contractor’s existing company SHE MS, programmes, procedures and policies; their purpose however is to give a heightened awareness of the activities which are most likely to result in fatalities.

Life-Saving Rules materials that were based on the International Association of Oil & Gas Producers Life-Saving Rules (LSR) (Report No. 459 April 2013 (Version 2)), who made their material freely available to implement. As the IOGP strongly recommends, the rules have been adapted to reflect CONTRACTOR’s communication style, use of multiple languages, and complexity of diverse operations. The fundamentals of each rule and icon remain the same.



Contractor's Life-Saving Rules are the last line of defence in protecting our people, whom we regard as our most valuable asset. This also extends to subcontractors' personnel working alongside us. These rules are not intended to 'stand-alone!', as they can only be effective if they form an integral part of our everyday workplace behaviours & procedures, rejecting the silent killer of complacency.

It must therefore ensure that:

- All personnel are fit & able to undertake their designated work activities;
- Personnel are not under the influence of alcohol or drugs, as stated in company policies & procedures;
- Work does not commence until all personnel are able to confirm that they are able to follow the rules that are relevant to their work activity;
- All work is suitably assessed, planned & executed, with safety as our most important guiding principle;
- All personnel are equipped with the knowledge, skills and equipment that they require to perform their work in a safe and efficient manner;
- All personnel are empowered to intervene and to 'stop the job' anywhere, or at any time when safety may be compromised.

The LSR work card is issued to all personnel to serve as the final check before work commences, helping you to comply with the rules.



- LSR Work Card –



Personnel MUST confirm their ability to comply with the scope of the Life-Saving Rules relevant to their work BEFORE commencing ANY work activity.

If work activities change or deviate from the agreed plan, work MUST stop and not recommence until new authorisation has been acquired and personnel confirm that they are able to comply with the scope of the relevant Life-Saving Rules.

7.3.3. Keep Your Hand Safe



Accidents involving hands are not fatal but may have serious consequences on the people's quality of life. 90% of people's daily activities are done using the hands. The identified causes can be the wrong or inadequate use of working tools and equipment, the lack of knowledge of the basic safety rules, or the inadequate use of personal protective equipment.

Therefore, this program has developed actions on the following levels:

1. Technical: machine, equipment, tool;
2. Work environments: pinch point identification;
3. Personal protective equipment;
4. People: leadership and commitment, awareness and training.

The 4 Campaign key prevention axes are:

MANAGEMENT LEADERSHIP AND COMMITMENT • Leadership, from start, on the field • All along the campaign deployment • Follow-up	**COMPLIANCE: METHODS, EQUIPMENT, TOOLS AND PPEs** • Ensure provision of Safe equipment, tools, PPEs (Personal Protective Equipment) • Ensure use of Safe methods, equipment, tools, PPEs
SAFETY AWARENESS • Increase Workers Awarenes on Hands Safety • Induce an Attitude change	**LEARNING AND SHARING** • Ensure learning and sharing from the worksite • Learn from the past events and incident reports



Subcontractors shall adhere and support the implementation of Contractor Keep Your hand Safe Campaign and implement the required actions within their own Project organization.

7.3.4. Dropped Object

A dropped object is any object or item of any mass, material or density that falls from its previous position. Dropped objects derive their capability for injury and damage from the conversion of their potential energy to kinetic energy prior to impact.

Dropped objects generate energy as they fall resulting in an impact force that can lead to fatalities, severe injuries, asset and equipment damage, loss of containment or control and damage to business reputation.

Following several high potential incidents, where dropped objects were involved, Contractor E&C has launched a Dropped Object Prevention Scheme (DROPS), in line with the current Best Practices, in order to improve and facilitate compliance with applicable Contractor Policies, Safe Systems of Work and any local or regional industry Codes, Rules, Laws, Conventions, Legislation, etc..

The Campaign will be articulated in different phases:

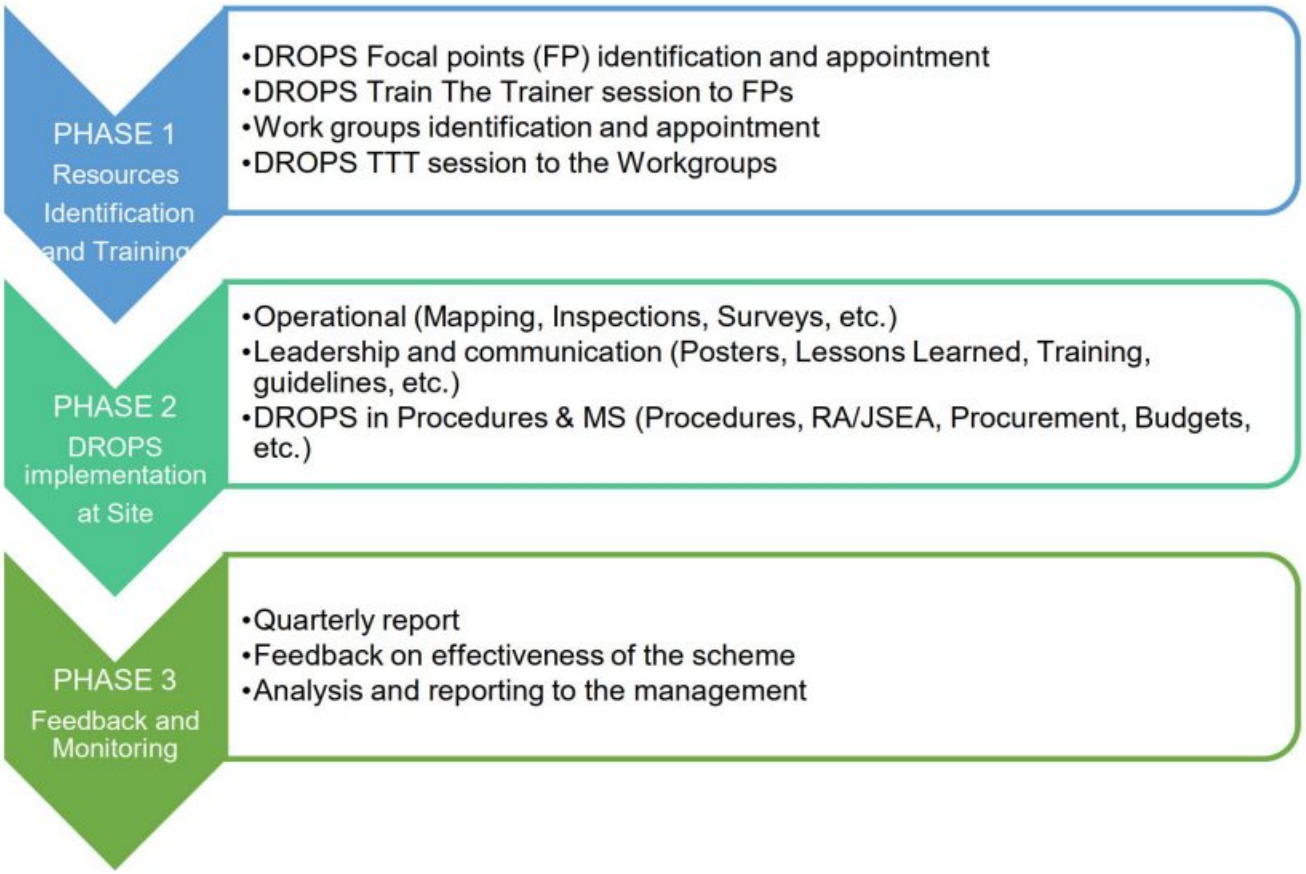

Subcontractors shall adhere and support the implementation of Contractor Drop Object Campaign and implement the required actions within their own Project organization.

8. SHE ACTIVITIES

8.1. Activities Overview

The main SHE activities that will be carried out during the pre-commissioning, commissioning and start up phases of the Project will refer to:

- Identification and assessment of SHE risks for the contracted job, covering hazardous equipment, workplace hazards, hazardous substances and harmful agents;
- Identification and assessment of the environmental and social aspects connected with project activities and define the relevant mitigation measures
- Choice and implementation of risk mitigation measures;
- Implementation of specific ERP in case of emergency occurrence;
- Issuing and implementation of safe working procedures for performing hazardous jobs, briefing of all personnel involved with the work regarding hazards and know-how of their avoidance;
- Preparation and implementation of project SHE training program to increase the level of knowledge for all the people involved in site activities;
- Performing routine checks of site firefighting and safety equipment to ensure they function correctly; routine checks on personnel working practices, ensuring they wear proper site clothing and PPE;
- Implementation of accident / incident investigation reporting procedure and monitoring that corrective actions to prevent reoccurrence of accidents are implemented;
- Reporting to Contractor organization and to PTTLNG the status of planning and implementation of activities to ensure safe pre-commissioning, commissioning and start up activities;
- Inspecting all machinery and equipment used;
- Perform periodically audits and inspections to ensure the correct SHE management.
- Implementation of Training Matrix;
- Verification of the monthly inspection of equipments and gears completed by CONTRACTOR and SUBCONTRACTORS.

CONTRACTOR developed Safety pre-commissioning, commissioning and start up procedures according to the Contractual requirements and collected them all together into the “SHE Plan for Commissioning and Start Up”, that shall comply with PTTLNG and CONTRACTOR requirements together with relevant industry codes, practices and norms and any mandatory regulation imposed by THAI authorities.

SHE Audits and inspections will be performed by CONTRACTOR during the pre-commissioning, commissioning and start up Phase of the Project, in order to ensure that the site activities shall be executed in accordance with the applicable laws, Safety Codes, SHE requirements, Regulations and good operations practices.

Each SUBCONTRACTOR SHE Manager is required to provide signed copy of the CONTRACTOR's Policy/Manual/Plan and procedures to confirm that he has read, accepts and understood.

It's responsibility of each SUBCONTRACTOR to define which specification may apply to their scope of work and provide justification for not being applicable for the CONTRACTOR's final approval.

SUBCONTRACTOR shall bring to the attention of SHE department any totally or partially misalignment /inconsistency/not applicability of the documents in this plan.

The acceptance of the SUBCONTRACTOR's SHE documentation doesn't relieve the SUBCONTRACTOR to strictly adhere to THAI regulation and applicable Site SHE rules.

8.2. Main SHE Deliverables

A preliminary list together with a brief description of the main SHE deliverables foreseen for the pre-commissioning, commissioning and start up phases is given below:

1. Safety Plan for Commissioning, Start Up and relevant procedures
2. SHE Risk Assessment for Pre-Commissioning and Commissioning activities
3. Emergency Response Plan for Pre-Commissioning and Commissioning
4. Waste Management Plan for Commissioning (WMP)

8.2.1. SHE Plan for Commissioning and Start Up

SHE Plan for Commissioning and Start Up defines all SHE working procedures that Contractor will apply during the pre-commissioning, commissioning and start up phases of the Project in order to properly face the SHE hazards that characterize the tasks forming the job and to avoid SHE accidents occurrence.

The SHE Plan constitutes a reference document for the SHE hazards identification, and control relevant to the whole pre-commissioning, commissioning and start up stages.

Additionally, the SHE Plan will state provisions for PPE, Safety signs and Barriers, inspections, audit, critical lifting and planning, etc.

This document will contain all Site SHE procedures to be implemented.

8.2.2. SHE Risk Assessment for Pre-Commissioning and Commissioning

CONTRACTOR shall provide information and input as required into PTTLNG's Report on Protective Measures for Operational Safety as required by Notification of the Ministry of Industry No: 3 (BE 2542) issued under the Factory Act BE 2535. The information shall be supplied based on the safety reviews, hazard and risk assessment carried out by CONTRACTOR.

Contractor's management will ensure that every work activity performed under the Contractor responsibility, by Contractor and its Subcontractors, vendors and suppliers is executed in a safe and controlled manner.

For each activity performed during pre-commissioning, commissioning and start up phases, a Qualitative/Quantitative Risk Assessment will be prepared.

All tasks will be subject to a written Method Statement, a Risk Assessment (RA) / Job Safety Environment Analysis (JSEA) carried out by competent persons, and submitted to SHE and Commissioning representatives for review and approval.

A RA shall be required for each Subcontractor activity, and mitigation measures shall be implemented before work commences.

Carry out a RA means to make a preliminary evaluation of risks and the evaluation of residual risks as result of the application of mitigation measures; the methodology deriving from the definition of risk is applied using a Risk Matrix:

- Probability Rate (P): quantification of the probability that a dangerous situation may result in harm to the exposed personnel;
- Severity Rate (S): quantification of the magnitude, namely the severity of the consequences for the exposed personnel that may cause harmful situations to degenerate;
- Risk Rate (R): the product of the probability rate (P) by the severity rate (S).

In this way it is possible to determine which concurrent activities need to be further investigated regarding safety and environmental aspects that are not normally foreseen, to improve a good site method statement.

Based on Risk matrix evaluation, it is possible to determine three levels of SIMOPS criticality having as result a SIMOPS Risk Matrix as in the Annex 1 to be considered as preliminary:

HIGH risk activities

In this case pre-commissioning, commissioning and start up activities are not permitted. The activities could be carried out by modifying the schedule in order to transform commissioning in sequential operation.

MEDIUM risk activities

The main instruments utilized by the Management to analyse and solve the Comissioning activities result in reviewing to be done during the coordination meeting and applying Permit to Work System.

Before activities start, a dedicated method statement has to be issued, by considering activities. In this case comissioning activities are permitted only if actions written in the Risk Assessment.

LOW risk activities

Existing Safeguards and existing safety control analysed during the coordination meeting have to be evaluated to consider if are enough to guarantee the safety conduction of pre-commissioning, commissioning and start up activities, or if the additional control measures are required. In both the cases respecting the criteria activities are permitted.

The complete process will be detailed in a specific CONTRACTOR document SHE RISK Assessment and JSEA procedure 122018-SPCC-C-SH-PR-0018

A separate document shall be issued the risk assessment of all activities performed on the project during each phase, specifically for commissioning into the doc n. 122018-SPCC-C-SH-RPT-0008 Safety Risk Assessment for Commissioning and Start Up

8.2.3. Job Safety Environment Analysis

The Job Safety Environment Analysis (JSEA) is an excellent and efficient technique for identifying unsafe conditions and acts in the working environment.

A JSEA is intended to analyse the individual steps or activities, which create a job or specific work duty, and to detect any specific potential hazard that may be released in the working environment.

Before starting every activity under the Contractor responsibility, Commissioning and SHE representatives will be accountable for a Job Safety Environment Analysis (JSEA), bearing in mind:

- The related Safety Manual procedure;
- The risk assessment;
- The available equipment;
- The other interfering activities;
- The number of workers to realize the job;
- The existing environment (including weather conditions) where the work has to be executed.

The resulting JSEA will be recorded and updated if any element should change.

The JSEA is commonly used to identify less obvious or specific potential hazards that may go undetected or being missed during routine management observations or audits or during the general RA analysis.

Moreover it:

- Can be performed relatively quickly for less protracted tasks;
- Identifies actual and potential physical hazards in the work environment, and helps determine how they should be managed;
- Reveals hazardous motions, postures, activities or work practices of individual employees;

- Assists personnel on how to perform operations, by breaking the job task down into individual steps and identifying risk and control measures for each individual step;
- Improves efficiency by identifying incorrect procedures or work instructions;
- Increases employee involvement in the safety process;
- Enhances communication between management and employees regarding safety concerns;
- Contributes to the productivity of a job by eliminating or reducing its injury potential;

The complete JSEA Methodology will be detailed in a specific Contractor documents SHE RISK Assessment and JSEA Management doc n 122018-SPCC-C-SH-PR-0018

8.2.4. Emergency Response Plan for Commissioning

The Emergency Response Plan has the aim to approach a site emergency and demonstrate that all the possible hazardous situations are properly identified, managed, reported and dealt with a safe, efficient and effective manner.

The ERP will describe the emergency system that the Contractor applies to the Project, in order to face the accidents that can occur during pre-commissioning, commissioning and start up phases.
Contractor initial ERP will be reviewed, if necessary, with PTTLNG to coordinate the mobilization of the following resources into a global ERP:

- the community (firemen, hospitals and doctors, police force, etc.);
- PTTLNG resources.

The ERP will be transmitted to:

- Control Personnel;
- Emergency Services;
- Employees who may be affected;
- PTTLNG/PMC Representative;
- Others likely to be impacted.

and will cover:

- organization, responsibilities, authorities and procedures including the maintenance of internal and external communications;
- systems and procedures for providing personnel refuge, evacuation, rescue, medical treatment and repatriation;

- systems and procedures for preventing, mitigating and monitoring environmental effects of emergency actions;
- procedures for communicating with authorities, relatives, the media and other relevant parties;
- arrangements for training response teams and for testing emergency systems and procedures.

The following scenarios will be covered as a minimum by the ERP:

- worksite injuries;
- safe escape and evacuation from site during emergencies;
- natural disasters (e.g. earthquakes);
- road traffic accidents;
- fire and explosion;
- missing person.
- Spill/Release

8.2.5. Waste Management Plan for Commissioning (WMP)

The Waste Management Plan will provide the guidelines to manage waste and wastewater produced during Project Site activities in order to ensure that each phase (collection, storage, transportation, reuse, recycle and disposal) is appropriately managed with respect to its implications on the environment and in accordance with International agreements, National Laws and requirements, including contractual ones.

This guideline will be followed by all Contractor and Sub-contractor employees throughout the site activities of the Project.

The objective of the Waste Management Plan is to identify and classify all wastes produced.

Each waste shall be classified, its quantity estimated and its disposal methods detailed (recycle/reused/treated).

The WMP is of primary importance in ensuring that disposal/facilities options are selected and justified with respect to their implication on the environment.

The scope of the WMP is to:

- Describe how the wastes will be managed (handling, collection, storage, transportation, disposal and record keeping);
- Provide guidance to the Contractor personnel for managing their wastes effectively and within the applicable waste regulation requirements;
- Provide guidance for the collection, handling, and temporary storage of each waste generated during operational activities to protect human health and to minimize the impact on the environment and the local communities;

- Control the amount of waste generated following good operating practices and respecting waste reduction principles;
- Give guidance for waste reduction according to the hierarchical application of the practices of reuse, recycling, recovery, treatment and final disposal in approved disposal sites.

The WMP will define the treatment of Waste Water also, i.e. Sewage Waters and Hydrostatic Test Waters. The WMP is a living document, which shall be updated and reviewed as necessary on site according to actual site conditions and actual waste streams being generated.
Reference : 122018-SPCC-C-SH-PR-0040 Waste Management Plan for Commissioning

8.2.6. SHE Training and Information Program

SHE training requirements will be identified as the gap between what an individual needs to know, in order to ensure the assigned tasks are performed safely and healthy, ensuring the protection of environment and local communities, and what he actually knows (due to training / qualifications / previous experience).
To provide information, instructions and training, Contractor will put in place a specific SHE Training Program for workers, on the basis of minimum SHE training needs, with the scope of familiarizing personnel with the rules to enforce in order to prevent injuries/accidents occurrence and allow staff work competently, safely and healthy in the tasks allocated, to increase efficiency and employee job satisfaction.
The Contractor SHE Team has the responsibility to organize and plan the SHE induction course for all workers and specific training for supervisors, SHE officers, emergency team and critical works or activities.
The Contractor Training Program is composed of:

- Site SHE Induction for every employee entering the site;
- General SHE Orientation for every employee working on the project;
- Training course for workers, supervisors and SHE personnel, as per training matrix (refer to Delphi presentations);
- Emergency response and rescue drills;
- Environmental training;
- Training refreshing courses for workers and supervisors.
- Tool-Box talks;
- Daily Job Specific SHE Talks;
- Others as deemed necessary.

General awareness of health, safety and environmental issues will be introduced during the General SHE Orientation and Training for all project personnel, with particular attention to items including, but not limited,

to: Permit to Work, firefighting, safety signs, housekeeping, hand tools and power tools, health diseases, scaffolding, manual handling, confined spaces, working at height, use of PPE's and escape, pollution prevention; SHE Policy statements and individuals' SHE responsibilities will be included as a fundamental requirement in orientation training.

Wider description within the SHE Training Procedure 122018-SPCC-C-SH-PR-0003

CONTRACTOR and SUBCONTRACTORS are responsible for deliver all necessary training, to each own employees, at their own cost.
SUBCONTRACTORs is required to continually reinforce the SHE message to their employees on general Site rules and train them in the SHE Requirements of their particular job.
If relevant with the performed activities, CONTRACTOR and SUBCONTRACTORs will inform their employees on:

- Risks identification, assessment & management (Job Safety Environment Analysis, work permit, environment awareness etc.);
- Personnel fitness (periodical medical check-up and/or vaccinations etc.)
- General operation safety (stepping-handling-lifting, personal protective equipment, working at
- height);
- Logistic safety (lifting gear, crane, forklift, container, motor vehicle transportation, personnel lifting);
- Mechanical safety (welding, cutting, sand blasting, painting);
- Pressure safety (compressed air, high-pressure circuits, pressure vessels, pressurized operations);
- Electricity safety (earth, lock out-tag out, classified zones);
- Safe handling and disposal of Hazardous material (fuels, acetylene, oxygen, radioactive materials, reactants etc.);
- Pollution control and environmental protection;
- Selection, use and care of all types of personal protective equipment;
- Life-saving and escape techniques (first aid, firefighting, emergency response/preparedness);
- Work at Height;
- Basic Safety Work practices for working on the sea
- Basic firefighting training for all workers;
- Chemical and Hazardous release;

Subcontractors shall also:
Inform their employees of the safe work methods to be adopted in their particular work including the use of standard PPE and additional PPE in line with Risk Assessment results;

Inform their employees of any special SHE rules for working near operating plant.

Inform their managers, supervisors and personnel of the "emergency procedures" so that they may provide the leadership and control required.

These training sessions shall be documented and sent to the Contractor SHE Manager/DSHEM. The SHEM/DSHEM will monitor subcontractors' training activities to ensure that satisfactory standards are maintained.

Presentation and material to be used during the training, whenever possible should be in line with Delphi system presentations.

8.2.7. As-Built Report

CONTRACTOR shall prepare a Safety, Health and Environmental (SHE) As-Built Report and submit to PTTLNG/PMC for review and approval soon prior to commissioning the overall facilities.

The SHE As-Built Report will include, as a minimum: a description of PROJECT environmental setting, SHE performance, statistics and KPI monitoring, SHE issues, incidents and aspects of commissioning by Phase, selected photographs showing activity, and any permits, approvals and documentation issued during the pre-commissioning, commissioning and start up phases.

Deliverable: SHE AS BUILT REPORT doc n. 122018-SPCC-C-SH-RPT-0006

8.3. SHE Meetings

The following SHE Meetings will be performed during the pre-commissioning, commissioning and start up phases:

- SHE Committee Meetings
- EIA Committee Meeting
- Weekly SHE Meetings;
- Weekly Workforce Tool Box Talks;
- Daily Job Specific SHE Talks.

8.3.1. SHE Committee Meeting

The Site SHE Committee, comprising Contractor, PTTLNG and Main Subcontractors, will be established to jointly plan, control and monitor the SHE at the site.

The committee will be led by the Contractor Project Management. The committee includes the following members:

- PTTLNG Representatives;
- Project and Site Management;

- SHE Manager;
- Main Subcontractors' Site Managers and SHE Manager.

The major functions of the committee are as follows:

- Review the SHE Activities Planned & Implemented for effectiveness.
- Establish detailed, common Health, Safety, Security and Environmental activity targets and actions necessary to achieve those targets.
- Plan and conduct site SHE events and activities for the motivation and awareness of all employees.
- Review SHE performance and statistics of all participants. Evaluate the causes and consequences of poor performance. Make public the results to all personnel.
- Disseminate information on all Site incidents involving Health, Safety and Environment, and near misses, including any root cause analysis performed, actions taken, and lessons learned (i.e. incident reporting).
- Study necessary measures for improvement.
- Identify hazardous activities and co-ordinate necessary measures among the parties involved in the work.
- Identify items to be monitored
- Conduct safety patrols to audit and inspect all areas.
- Review and issue the results of audits and inspections and discuss necessary measures for improvement.
- Discuss safety and environmental orientation and training.
- At least once per year, review the adequacy of the Project SHE objectives and target and the suitability and effectiveness of the SHE MS.

The Committee will generally meet monthly or more frequently if needed with, as reference, the following standard agenda:

- Review of previous minutes of meetings;
- Review of results of joint inspections and actions taken;
- High risk activities;
- Current activities and problems;
- Accident review and corrective actions taken;
- Future activities.

For compliance to THAI Law and the EIA:

SPCC shall act to comply with the Thai law for the SHE Committee in the CHAPTER-2, CLAUSE 23 of the Ministerial Regulation on the prescribing of standard for Administration and Management of Occupational Safety, Health and Environment B.E. 2549.

Minute of SHE Committee Monthly Meeting (MoM) shall be submitted together with the Safety professional report to the Labour Dept on every quarterly.

EIA monthly Committee meeting shall take place as specified into the approved EIA, it consist of representative from Communities, Government agencies, it's organized by PTTLNG, however the Chairman will be appointed from EIA Committee the and supported for the organization by CONTRACTOR and EIA's SUBCONTRACTOR.

8.3.2. Weekly SHE Meeting

During this meeting, Contractor and Subcontractor SHE depts. will plan and monitor the progress of the SHE activities implemented at site.

The presence of the site management could be requested depending the activities to be discussed.

The meeting will be commonly conducted once a week and minutes of the meetings distributed to the attendees, and Contractor and Subcontractor site management.

Every SUBCONTRACTOR establishes a weekly Safety report to be delivered during the SHE weekly meetings, such report contains at minimum the following past week information:

Worked hours

- Number of Lost Time Injuries - LTI
- Number of Restricted Work Cases - RWC
- Number of Medical Treatment Cases - MTC
- Number of First Aid Cases - FAC
- Number of Near Misses – NM
- Number of SHE inspections, audits
- Number of Safety Hazards & Observations Cards (SHOC)
- Number of SHE induction performed
- Number of Tool Box Meetings
- All information about significant events which occurred during the week.

The weekly Safety reports will be consolidated every month into the monthly Safety report, which will be communicated according to a distribution list established for the project.

Subcontractors are required to submit to DSHE Manager the safety statistics as per ANNEX 1 by 1st day of each month and provide update on weekly base.

In the weekly SHE meeting it will be also updated the status of follow-up actions and will be provide co-operation and all requested information to assist in the investigation and preventive action of any accident or incident.

All statistical data continuously captured along the project are monitored and analysed by the various SHE committees and compared to the targets. These reviews can lead to preventive or corrective actions in order to improve adequacy or efficiency of the SHE organization, system and effective prevention.

8.3.3. Weekly Workforce Tool Box Talks (TBT)

The weekly Workforce Tool Box Talk meeting will be addressed to the whole workforce with the aim to discuss general safety matters potentially affecting the whole work group.

TBT should not exceed 15 minutes, and will be held at the beginning of the week prior to dispersing the workforce into smaller crews to commence work.

Contractor and Sub-Contractors Commissioning Superintendents/Supervisors/Foremen shall attend the Tool-Box Talk at least in a rotating basis.

8.3.4. Daily Job Specific SHE Talks

A pre-job specific meeting is the final review stage led by the foremen (if any, supported by SHE personnel) prior to the actual start of each crews daily work activity.

This meeting is held at the work face, and provides a good opportunity to make a last minute review of the safety procedures for the work to be performed.

The meeting will be conducted at least daily, and in any case, before each shift begin.

Based on the JSEA analysis previously performed, High-risk work phases and potential hazards can be highlighted and discussed to make sure everyone has a clear understanding of the precautions required and the role each person plays in performing the task safely.

Other personnel (middle management or supervision personnel) could attend the meeting, if required.

A written record will be maintained summarizing the main points of discussion.

8.3.5. PTW Coordination Meeting

According to the provisions of the PTW System, as described in the specific Safety Manual Procedure, a relevant PTW Coordination Meeting will be held.

- Number of PTW shall be summary and submitted to PTTLNG/ PMC on daily basis

8.3.6. Other Meetings

If necessary, under Contractor evaluation, other Meeting could be held in order to assure the correct disclosure of all the SHE aspect or issue and the proper coordination of the activities.

8.3.7. Project Meeting Recap Table

If necessary, under Contractor evaluation, other Meeting could be held in order to assure the correct disclosure of all the SHE aspect or issue and the proper coordination of the activities.

KOM with SUBCONTRACTORs	Prior to commencement of the works by the SUBCONTRACTOR, a kick-off meeting is carried out between CONTRACTOR, Partner and each of the SUBCONTRACTORs. Team members are Site Manager, Commissioning Manager and SHE Management of each party and other Management representatives. One of the objectives of the kick-off meeting is to present : • Safety expectations and the specific SHE requirements of the Project • Site safety rules (including discipline) • Organizational requirements (meetings, audits/inspections, notifications, etc.)
Quarterly upon Site opening PMT Meeting	PTTLNG, CONTRACTOR and SUBCONTRACTOR Project Managers conduct a Site visit and then meet to discuss the main following issues: • Communicate to personnel stimulating but reachable objectives • Promote SHE culture and behavior • Create and evaluate the efficiency of the SHE organization in place • Review the global efficiency and the SUBCONTRACTOR's performances and encourage proactive indicator development • Share feedback and lessons learned sharing amongst the different parts of the Project.
Site SHE Monthly Meeting	Management Committee with PTTLNG and SUBCONTRACTORs: CONTRACTOR Site SHE Manager sets one meeting per month with SHE representatives. These site-based SHE meetings shall be utilized to: • Review and discuss SHE performance and accomplishments for the previous period and activities planned for the upcoming period. • Provide a forum for PTTLNG feedback regarding the performance and expectations of CONTRACTOR SHE performance. • At every meeting, SUBCONTRACTORs' management representatives at the work location shall be invited and shall present their SHE performance and

	accomplishments for the previous period and activities planned for the upcoming period.
Weekly Site SHE Meeting	CONTRACTOR (Site Manager, Commissioning Manager, SHE Mgr.), SUBCONTRACTORs (local Manager, senior SHE supervisors) and PTTLNG (Commissioning Manager, SHE Manager) are discussing the following items: • SHE program • Two weeks activities look ahead prior to their commencement • The good understanding of SHE principles by the entire workforce • The progress of the SHE culture and feedback from the personnel • Current SHE issues and events • Potential hazards, Near Misses, Incidents and related actions to be taken
Tool Box Meetings or Tool Box Talks (TBT)	1) Weekly TBTs : work site conducts weekly Tool Box Meetings (often referred as Tool Box Talks) with employees and their immediate supervisor/foreman to discuss the following issues: • Review of actions items from the previous meeting • Incidents and near misses occurred during the period; remedial action taken • Problems employees may be experiencing in execution of a given task • New activities planned for the coming week • Review of any JSEA applicable to any task performed on regular basis • Supervisors and foremen have the opportunity through this meeting to issue recognition awards to meriting employees • Specific prevention topic, for instance: Manual handling, lifting, electricity, Work at Height.
	2) Pre-Job Meeting :The supervisor conducts the Pre-Job Meeting with his crew prior to starting the day or shift activity and uses the following broad format : Review previous day's safety effort and outcome by asking questions: • "How did we do yesterday?", "were there any incidents?" • "Was the correct equipment available to allow the work to proceed safely?" • "Did the equipment operate correctly?" • "Did the work progress as planned?" • "What brought about any changes to the plan?" • Briefly overview today's tasks, focusing on what safety hazards may be faced.

- Discuss in detail, the foreseen hazards and the planned control measures for these hazards – refer to Pre-job checklist and get employee input and involvement.
- Finish the meeting with a positive and encouraging comment. Employees are encouraged to make comments and suggestions.
- Prior to starting a new job, simultaneous operations, or hazardous operations , or all non–routine , or any work requiring a PTW a pre-job meeting is conducted with all personnel present involved in the operations.

8.4. Identification Areas and Access Control

All areas under pre-commissioning, commissioning and start up are clearly identified and fenced with rigid barriers.

In order to avoid the access of unauthorized personnel each area is permanent monitored on its battery limits through an Entry Control Point guarded by dedicate securety personnel at all time.

The access of personnel is regulated at two different level:

- Personnel (Contractor/PTTLNG/Vendor) with free access to the area through the possession of a dedicated badge indicating the allowed areas.
- Subcontractor personnel through the indication of names in the permit to work.

In case of the entry for short duration, where the issuing of badge or the permit to work are not applicable, a dedicated authorization, containing the name of the person, the area, the duration and the signatures of area responsible, SHE commissioning and Commissioning Manager, shall be prepared and delivered to the post guard.

In any case, the access will be allowed only with the green badge attesting the assistance to the Commissioning Induction. Only trained personnel can have the green badge and appropriate sticker on helmet.

Sample of Green badge and sticker on helmet





The agent in the post guard register in a logbook the entry and the exit of all personnel and, if any, acPTTLNGing equipment/vehicles. They deliver to each person a numbered Visitors Pass, collecting the his ID badge. In case of emergency, they will take logbook to Muster Point to confirm Head Count.
The same rules will be applied also for substations under commissioning responisility.

For personnel without dedicated badge, the agent inform the Area Responsible or his delegate about the presence in the post guard of personnel requiring the access. He goes to checkpoint to authorize the access after the checking that:

- a proper duly signed PTW is in place;
- all personnel have appropriate PPE;
- all equipment/vehicles are in compliance with the requirements of the area;
- all personnel know the Emergency Evacuation procedure and the location of escape routes and muster points of the area;
- all safety procedures are in place and complied with at all times by personnel;

The Area Responsible or his delegate accompains the team to the work place ensuring that they stay at all time in the designated area. After the completion of the activity, he inspects that the area is in safe condition and accompains the work team to checkpoint for the logout.
In case of visitors, they shall be escorted at all time by the Area Responsible or his delegate.
Nobody will be permitted to move about the area or buildings alone.

Along the fence of the area, warning signs will be installed in order to advise all personell of risks and precautions to be take. They will be clearly visible and comprehensible to every worker.

A suitable number of emergency gates will be provided along the fence and the passage through them will be allowed only in case of emergency.

Some pre-commissioning, commissioning and start up areas are affected by the presence of gas inside some lines and, for this reason, are subjected to particular restrictions:

- Smoking is forbidden
- Only ex-mobile phones and radios are allowed in the gas areas
- Cigarettes, lighters, common mobile phones, cameras, music devices and any other tools not intrinsically safe are forbidden and shall be left in the office or at Entry Control Point.
- Only antistatic and flame retardant coveralls shall be wore at all time. For visitors not involved in hot works the antistatic paper coveralls are allowed.
- The access of vehicles is allowed if strictly necessary for the transport of material.
- The Pre-Commissioning and Commissioning vehicle inspection and sticker color coding system are required. In any case the vehicle shall have flame back arrestor and a dedicated permit to work shall be prepared. Personnel/Workers/Visitors shall leave all prohibited items at the checkpoint.

It is not allowed to touch or to climb over equipment at anytime, unless the permit to work has been authorized.

- Communication system during commissioning shall use explosion-proof Walkie-Talkie number of Walkie-Talkie be provided to the client by following contract agreement

These safety indications shall be followed at all time in order to guarantee the safe condition of the people and the plant.

All pre-commissioning, commissioning and start up subsystems, especially the ones crossing areas under construction responsibilities, are clearly identified through the apposition of yellow and black tape and warning signs.
A plot plan showing all the areas and subsystems under pre-commissioning, commissioning and start up will be constantly updated and transmitted to all the personnel involved in project activities.

8.5. Tags and warning signs

In addition to the normal, frequently seen safety tags and signs, Commissioning will use various tags and signs during the pre-commissioning, commissioning and start up phases of the project. Only commissioning personnel are authorized to place and remove pre-commissioning, commissioning and start up tags. Tags

shall only be removed by the owner of the tag and checked weekly to ensure that they are still in place, and that the reason for placement is still valid. Any person may place a Danger Do Not Operate tag for safety reasons if they identify a piece of equipment that is unsafe, after placing such a tag, a Commissioning Supervisor or Commissioning Safety Officer must be informed.

Examples of tag types

- DANGER - DO NOT OPERATE
- EQUIPMENT UNDER TEST
- OUT OF SERVICE
- SPADE TAG
- DANGER LIVE
- NO ENTRY

The DANGER – DO NOT OPERATE tag is used to identify valves, switches,' etc, that must not be operated

The EQUIPMENT UNDER TEST tag is used to identify equipment that is under test where operation of Valves or switches could lead to equipment damage or operating upset. It is used for pre-commissioning, commissioning and start up activities such as maintenance, motor test runs, compressor N_2 runs, calibration and testing with controlled risk levels

The OUT OF SERVICE tag is used to indicate that the equipment is not to be used for various reasons.

The SPADE TAG is used to identify commissioning spades and must not be removed by any personnel other than the commissioning group under a cold work permit. Tagged spades often indicate the boundary between the live plant and the systems being commissioned or between piping systems under commissioning and piping systems still under construction. The tagged spades will be checked against an installed spades list, on a regular basis by the commissioning personnel.

In addition to tags on valves and switches, various identification markers or stickers will be affixed to piping systems at regular intervals as they become operational. These will serve to indicate to all personnel that this piping is under pressure or live and must be treated with extra caution.

As electrical drives/systems come under the control of Commissioning. Electrical commissioning, warning labels "Danger Live" will be affixed to the appropriate cubicles in substations and equipment in the field to warn personnel.

8.6. Training Program

Training sessions will be required to familiarise parties having a role in the pre-commissioning, commissioning and start up Process with the overall process and techniques used for integrated planning, review and other activities.

Time will be set aside before initial integrated planning sessions and commissioning reviews for on-the-job training instruction and toolbox talks. This will be repeated as necessary whenever inexperienced personnel take part in these activities.

Contractor will carry out Trainings for own direct personnel respecting training matrix as defined in the relevant procedures.

Subcontractors will also be required to continually reinforce the SHE message to their employees on general Site rules and train them in the SHE Requirements of their particular job.

If relevant with the performed activities, Contractor and subcontractors will inform their employees on:

- Risks identification, assessment & management (Job Safety Environment Analysis, work permit, environment awareness etc.);
- Personnel fitness (periodical medical check-up and/or vaccinations etc.)
- General operation safety (stepping-handling-lifting, personal protective equipment, working at height);
- Logistic safety (lifting gear, crane, forklift, container, motor vehicle transportation, personnel lifting);
- Mechanical safety (welding, cutting, sand blasting, painting);
- Pressure safety (compressed air, high-pressure circuits, pressure vessels, pressurized operations);
- Electricity safety (earth, lock out-tag out, classified zones);
- Safe handling and disposal of Hazardous material (fuels, acetylene, oxygen, radioactive materials, reactants etc.);
- Pollution prevention and environmental protection;
- Selection, use and care of all types of personal protective equipment;
- Life-saving and escape techniques (first aid, firefighting, emergency response/preparedness);
- Work at Height;
- Basic firefighting training for all workers;
- Toxic release;

Subcontractors shall also:

- Inform their employees of the safe work methods to be adopted in their particular work including the use of standard PPE and additional PPE in line with Risk Assessment results;
- Inform their employees of any special SHE rules for working near operating plant.

- Inform their managers, supervisors and personnel of the "emergency procedures" so that they may provide the leadership and control required.

These training sessions shall be documented and sent to the Contractor SHE Manager. The SHEM will monitor subcontractors' training activities to ensure that satisfactory standards are maintained. Presentation and material to be used during the training, should be in line with Delphi presentations.

8.7. Permit to Work System

In the areas directly impacted by pre-commissioning, commissioning and start up activities, Contractor will use PTTLNG PTW system.

8.8. SHE Initiatives and Communication Means

In the event pre-commissioning, commissioning and start up occur the critical element is communication.
It is imperative that clear and continuous communications be maintained between all SPCC and personnel, and sub-contractors. Communication shall be established before start of the pre-commissioning, commissioning and start up and shall continue throughout the operation. All personnel involved in pre-commissioning, commissioning and start up must be diligent in communicating their activities with the other involved entities.

8.8.1. SHE Alerts/Bulletins

In order to share SHE awareness and information with the entire Site Team, SHE Alerts/Bulletins will be occasionally spread out, also by mean of mailing list, on topics related to the Project (e.g. Accidents and Near Miss, new SHE procedures issued, etc.) or related to other Sites/Projects.

8.8.2. Notice Board

SHE Notice Board will be made available at Site in order to assure proper communication and awareness for those people that don't have access to the mail service.
The Notice Board will contain information regarding SHE Policy, Emergency Numbers, Training Program, SHE Services, SHE Alerts, etc.

8.9. SHE Incentive Scheme

CONTRACTOR will establish both a disciplinary and safety incentives program to curb unsafe or hazardous acts and behaviors and reward safe and team oriented PROJECT personnel. Further details within SHE procedure doc. N. 122018-SPCC-C-SH-PR-0036 - Incentive Scheme Program Disciplinary Action

Procedure, moreover it's established and communicated to the PROJECT personnel during induction and when possible to the SUBCONTRACTORs at Kick-Off Meeting.

SHE incentives schemes or challenges are implemented to motivate all workforce including SUBCONTRACTORs to work safely and in an environmentally friendly manner, and to raise the SHE awareness of the workforce.
Personnel receive awards based on their personal leadership on safety or on best Safety Hazard Observation Cards issued.

In addition, incentive schemes are developed to encourage the SHE awareness of the workforce and foster open incident and near-misses reporting. This Incentive scheme, along with a transparent and fair disciplinary procedure, improves the SHE culture of the workforce.
The incentive program can include the implementation of a suggestion system to allow personnel to offer a safety suggestion, identify an issue or concern, or recognize a co-worker. The suggestion forms are turned to the site SHE Manager for review, prioritization, and capture.
Action items resulting from forms are logged, tracked to resolution, and communicated back to

PTTLNG may elect to participate in such program.
Recognition programs provide a structured means to periodically reward (typically on 3 monthly base) and recognize those personnel who have contributed in making the worksite safer.
Working safely is seen as a condition of employment, therefore awards will not be directly linked to the expected safety behavior.
All personnel are encouraged to actively take part in the schemes.

The Safety Awards distributions are organized weekly or monthly and are based on merit, active participation, and the achievement of pro-active safety performance targets; such as:

- Near Miss/ Safety Observation Unsafe Act/ Condition Reporting
- Safety Initiatives/ Suggestions
- Displaying safety consideration to fellow workers

The rules and criteria defining this scheme are described in the "122018-SPCC-C-SH-PR-0036 - Incentive Scheme Program Disciplinary Action Procedure".
Project works closely with CONTRACTOR (and PTTLNG if applicable) to choose the most appropriate safety awards. The awards are presented in presence of the PTTLNG and CONTRACTOR Site Representatives.

8.10. SHE Penalty Scheme

The Project operates under a "Just Culture" which places individual accountability on employee's actions by defining the lifesaving safety rules and general project safety culture which must be respected by all.
As examples, the following behaviors will be cause for disciplinary/penalty action:

- Violation to the Life Saving Rules
- Performing work under the influence of drugs or alcohol and/or possession of alcohol and drugs.
- Act of violence against people or willful damage to equipment/property.
- Violation of the Safety road transportation Law and Code
- Violation of speed limit at site
- Disregard towards the safety of PTTLNG or fellow workers.
- Significant economic harm to the Project.
- Failure to report incidents or risk exposures.
- Smoking in a non-smoking area.
- Violation to SHE rules.
- Horseplay or practical jokes.
- Failure to wear the correct PPE, improper use of safety equipment.
- Failure to comply with PTW, safety procedures/instructions, qualifications.
- Gambling, hunting, fishing.
- Other unacceptable acts or behaviors may be prohibited to reflect cultural values of local communities and Thai society in general.

8.11. SHE Inspections and Audits

Scope of this activity is to verify, during the whole PROJECT life-cycle, the correct implementation of the SHE Management System and to evaluate the overall PROJECT SHE performance, for which the PROJECT Director (PD), Site Manager (SM) and SHE Manger (SHEM) are responsible.
The SHEM will assist the auditors in their activities and help manage possible recommendations in order to properly address them.
Audit results will be documented in dedicated Audit reports and shall include good points, corrective action requests and recommendations, and shall be reported to CONTRACTOR Management in a timely manner.
Corrective actions shall be implemented and their effectiveness verified.
During the audit, the CONTRACTOR monitors the compliance of the PROJECT activities, carried out by CONTRACTOR itself, by SUBCONTRACTORs and/or Vendors, with: Weekly Management Safety Walks.
At least once a week, a site inspection tour will be conducted by the CONTRACTOR and SUBCONTRACTOR Site Management, SHE and Commissioning representatives, in order to identify and ensure the

accomplishment of the necessary organizational measures necessary to solve any SHE issue that has not been solved by the lower supervision levels.

At the end of the inspection a briefing will be conducted among the participants in order to agree an action plan and identify the necessary resources in order to solve the found issues.

8.11.1. SHE Inspections

The site SHE staff is entitled to perform SHE tours on a regular basis, to confirm compliance with safe methods of work. In these checks the SHE can also use checklists based on the risk assessment of each job.

The frequency will be evaluated and established by FSHEM depending on the following factors:

- Size of the inspected area.
- Number of people working.
- Kind of activities carried out in the site.
- Skill and experience of the operatives.
- Frequency of accidents/incidents/near misses.

At least once a week, a site inspection tour (Safety Patrolling) will be conducted by the Contractor and Subcontractor Site Management, SHE and Commissioning representatives, in order to identify and ensure the accomplishment of the necessary organizational measures necessary to solve any SHE issue that has not been solved by the lower supervision levels.

At the end of the inspection a briefing will be conducted among the participants in order to agree an action plan and identify the necessary resources in order to solve the found issues, remedial actions to remove any dangers, and make working places safer, will be put in place by the relevant department/ subcontractor.

Moreover the inspection is also an opportunity to share the actions taken and improvement achieved.

For the piece of Equipment inspection a specific register for each piece of equipment shall be used and the inspection must be provide by competent and trained Inspector once a month, after the inspection the inspector shall also put the sticker for the colour coding system.

Type # Frequency	Visit / Inspection Scope	Visit / Inspection team members
Management SHE Visits # Yearly (minimum)	Visit of any zone and observation of housekeeping status, visible equipment state, safety rules compliance for equipment and persons, work permit and environmental compliance. These visits give an occasion to communicate with work teams to show commitment and to check SSHE awareness.	Visit conducted by the Line or Project /Site/ Vessel Mgr. + person responsible for the area (constr. Mgr., CONTRACTOR and SUBCONTRACTORs supervisors) + SHE rep.

The Management SHE visits are generally scheduled at short notice according to the travels of the Managers for the business on the site.

Type # Frequency	Visit / Inspection Scope	Visit / Inspection team members
Weekly Site Management Inspections (or safety patrolling or safety tours) (or walkthroughs) # Weekly (minimum)	Visit of work areas; interviews of supervisors and employees to assess the efficiency of communication; checking of a sampling of inspection and incident investigation reports; PPE compliance, etc. Recommended frequency = weekly	At least a PTTLNG member + area or discipline Mgr. + site SHE management. Occasionally members of the PMT when they are coming on the site.) + SHE rep.
Medical & Hygiene Inspections # Monthly	Inspection of Hygiene in social premises, catering facilities, accommodation, etc. Inspection of equipment and medicine available in clinics, ambulance, etc.	Site Medical Team
Equipment inspections # According to legislation & guidelines	Use of checklists specific to the different types of equipment: lifting, piling, diving, marine vessels, compressed air, marine vessels, vehicles, electrical installations and grounding, hand tools, working at height equipment, etc.	Supervisor or SHE competent for the type(s) of equipment to be checked together with the inspector qualified by Law
Supervision Team Inspection # Weekly	Inspection of the work areas, of the checklists completed; checking of equipment and materials; observation of	One site SHE team member + area supervisors (including SUBCONTRACTOR)

	employee behaviors, interviews to assess Toolbox and JSEA effectiveness; review of incident investigation reports; identification of anomalous situations	+ system leaders for CCA during Pre-commissioning, Commissioning and Start up.
Environmental Inspections # Weekly	Inspection of all the site areas: effectiveness of the wastes sorting and storage ; application of dust control ; containments in place, pollution traces, seashore aspect, applicable EIA mitigation measure etc.	Environmental supervisor.
SHE daily inspection 1# During the day/shift	Inspection with checklists prepared by the Site SHE team about the main risks associated to the works in the area (s) inspected.	Site SHE team member(s).
2# End of day/shift	To ensure that all work areas are secure and at minimum: • All equipment is stopped and switched off, • Collective protection equipment is in place, • All personnel is off, • The work areas are left clean and in order.	SHE Supervisor or Officer of each SUBCONTRACTOR checks their own work area(s).

Inspection/checklist forms have been reported within the SHE Plan for Commissioning and Start Up

8.11.2. SHE Audits

Based on a project Audit schedule, the Contractor SHE Department will conduct audits of the work site, management system and status of compliance with the essential elements of applicable SHE practices, regulatory requirements, trends, results of previous inspections, accident/incident management, review of corrective action trends and progress.

In particular, as reference, the specific objectives of the Project SHE Audit are to verify:

- Respect of Laws and regulations;
- Responsibilities;
- Risk evaluation and management;

- Respect of the environment;
- Safeguarding of health;
- Competence and training;
- Emergency preparedness;
- Incident investigations;
- Inspections;
- General site conditions of pre-commissioning, commissioning and start up areas;
- Project SHE documentation applicability;
- Contractor SHE organization;
- Project SHE procedure implementation;
- Follow up of previous recommendations.

Auditing will be performed by personnel not directly involved in the activities, also within the Contractor Organization, with the use of standard and specific check-lists; audit reports will define needed corrective actions in function of non-conformity highlighted during the inspection of the site.
Deficiencies identified during the audit are reviewed and analysed to determine potential failures in the SHE Management System and to develop appropriate corrective actions.

Findings are discussed with site key personnel during a closing meeting. Deficiencies are documented along with the corrective actions, responsibility for completion and targeted completion dates.
Ref procedure: 122018-SPCC-C-SH-PR-0013 SHE AUDIT Procedure

Type # Frequency	Visit / Inspection Scope	Visit / Inspection team members
CONTRACTOR SHE audits # Yearly (minimum)	Audit of worksite SHE-MS to check compliance with CONTRACTOR rules and standards	CONTRACTOR SHE Department auditors
Monthly EIA external Audit	As per Environmental Monitoring Plan, to ensure that compliance with environmental monitoring and mitigation measures as per EIA requirement	Third party (UAE)
Internal Project SHE-MS audit (*) # Yearly (minimum)	To assess the effectiveness of all the SHE activities and processes described in the Project SHE-MS.	Site Internal auditors

	Can be split into 2 to 4 sub-audits looking at different processes (*) The audits are conducted at a minimum frequency of 1 / year, unless otherwise specified by the Project Manager, who can establish shorter intervals (for instance in case of an unsatisfactory performance).	
Medical Audits # Yearly (minimum)	Health Management system: to verify that the site is implementing and complying with the Health Plan	CONTRACTOR Medical Coordinator
Environmental management audits # Bi-annual (minimum)	Audit of the Environmental system: compliance with procedures / plans, effectiveness of the monitoring plans, of the environmental surveillance. Can be combined with the Internal Site SHE-MS audit	One commissioning team member + SHE Mgr. or DSHE Mgr.
ISO 45001 audit # Yearly (maximum)	In the context of the ISO 45001 each project is able to be chosen by the certification body for performing a SHE-MS audit	Third Party auditors
PTTLNG Audit & safety Assessment # PTTLNG's Audits	Different types of audits / inspections can be carried out by the PTTLNG.	PTTLNG's team generally assisted by the CONTRACTOR Site SHE Management.

8.12. Incident Investigation, Reporting & Follow-Up

Injuries and/or accidents including serious incidents will be immediately reported to the Contractor Management and PTTLNG and immediately investigated.

Contractor will ensure that an immediate oral report is made to the PTTLNG Representative in the case of:

- fatal Injuries;
- injuries requiring medical attention, which may or may not result in lost time;
- damage, in any amount, to PTTLNG equipment or property.

It is the duty of Contractor's and Subcontractors to notify the SHE Management of any accident or incident immediately.

For accidents involving fatalities, lost time injury, medical treatment case, restricted work case, or damage to PTTLNG equipment or property, a preliminary report will be submitted to PTTLNG representatives. After investigation a final report will be submitted as well.

CONTRACTOR shall report to PTTLNG immediately on the occurrence of any injury to its employees, or SUBCONTRACTOR employees, incident or damage to equipment or Terminal, including near misses within twenty-four (24) hours of the occurrence. A detailed written report of incident shall be presented to PTTLNG within the next working day, with proposed measures to avert such incidents or occurrences. Accident and incident management shall incorporate PTTLNG's Key Performance Indicators (KPIs) requirements.

CONTRACTOR will update in the weekly SHE meeting on the status of follow-up actions and will co-operate and provide all requested information to assist in the investigation and preventive action of any accident or incident.

Written reports will be prepared and submitted according to a specific CONTRACTOR procedure Incident Notification and Investigation doc n 122018-SPCC-C-SH-PR-0014.

CONTRACTOR shall incorporate accident/incident records in SHE monthly report to PTTLNG

.

Register and records of all incidents involving WORK shall be maintained to assess SHE working performance and the need to introduce additional controls.

InSight tool and Incident tracking tools must be used for the management of the incident reports. (notification, preparation and follow up of Incident Report including the management of corrective actions).

8.13. SHE Performance and Reporting

SUBCONTRACTORS are required to update statistics every week during the Weekly safety Meeting in accordance to the annex 1.

On a monthly basis the Contractor SHE Team will prepare a report to be issued within 1st week of each month to PTTLNG including safety statistics, details of any hazardous incidents, near misses, training, environmental performance, environmental incidents and activities relating to environmental aspects and EIA requirement.

Safety and Environmental data are recorded using Insight software.

For details relevant to the Environmental reporting please refer to the Environmental Management Plan issued for the PROJECT doc n. 122018-SPCC-C-SH-PR-0031.

8.13.1. Safety Data

InSight Tool has to be used in order to add the monthly project statistics.

8.13.2. Environmental

According to the Contractor Standard, SHEM will prepare an environmental report on a monthly base through HSE Monthly report.

Environmental performance data to be reported include:

- Water Consumption
- Water Discharged/Reused
- Hardous and not-hazardou Waste
- Energy consumption
- Oil and chemical spills
- EIA Audit observations and/or good practices.
- Medical facilities

Each sub-contractor that works at the site, will have to complete and submit on monthly basis the environmental reporting to SHEM, using project reporting FORMs, to include such data in the quarterly environmental reports of Contractor.

The data reported will be verified in the periodic audits/inspections carried out. This guarantees the reliability and traceability of the environmental data reported.

8.13.3. Implementation and Monitoring

Safety Statistics record keeping and reports

The DSHEM collect all SUBCONTRACTORs “Monthly Safety Statistical Reports” analyze all the information and fill the same form in SHE Monthly Report considering the totality of man-hours and recordable cases during the month, complete and provide the SHE Monthly Feedback at the close of each month to the SM and to the SHE Head Office.

Project SHE reporting for EIA compliance

Each SUBCONTRACTOR SHE Manager shall complete and submit the “Monthly Safety Statistical Report” (Annex1 of the present Plan and the 122018-SPCC-C-SH-RPT-0037) to the DSHEM at site first day of each month.

Safety performance will be analyzed every month considering in the Monthly SHE report (122018-SPCC-C-SH-RPT-0037) the Indicators and the Pro-active indicators.

In case result are not satisfactory additional action will be required to improve the site conditions.

SUBCONTRACTOR requirements

SUBCONTRACTORs have responsibility for the SHE of their operations irrespective of whether carried out by themselves or others.

SUBCONTRACTORs shall either:

- issue and keep up to date their own SHE Commissioning Plan that shall be in compliance with this document. All SUBCONTRACTORs shall comply with the most stringent of this document and their SHE Commissioning Plan; or
- fully adopt and comply with the requirements of this SHE Plan for Commissioning and Start Up as if their own and other way improve with comments;
- provide specific SHE procedures (work instructions) for the works using procedures in this plan and into the SHE Plan for Commissioning and Start Up. SUBCONTRACTORS must also complies to the SUBCONTRACTORS SHE Requirements 122018-SPCC-C-SH-PR-0020.

8.14. Other SHE Aspects

8.14.1. Management of Work Interferences

In case multiple works shall be carried out in the same area and are in some way interfering, in order to minimize the risk following step, shall be followed:

- a coordination meeting shall be arranged, interferences shall be pointed out and eventual additional safety measures planned. In case there isn't any chance to reduce the additional risk consequent to the work interference, works shall be shifted;
  a work permit shall be issued;
- add other requirements according to project requirements if any.

Depending on the interference typology following solutions could be considered applicable:

- one work activity will be interrupted up to the other will be completed;
- area will be fenced and signaled, inside this space nobody will be authorized to carry out any other activity, as in case of the lifting activity;
- apply collective protection;

- safety distances shall be respected;
- add other measures if necessary.

All Commissioning and SHE Supervision shall be made aware and trained concerning the correct management of the works interferences.

8.14.2. Simultaneous Operations (SIMOPS)

Contractor has noted that, at certain stages, the execution of Work may take place in areas shared with PTTLNG's personnel and other Contractors /Subcontractors.

Work shall be performed simultaneously and may result in a high concentration of manpower in particular area.

During these periods, particular attention shall be paid to SHE conditions, both within the areas of Site and at the interface with adjoining areas. In addition Contractor shall be required to liaise with neighbouring workforces at management level and agree on procedures to regulate Work where interaction or SIMOPS may take place.

The Project Management Team must be aware of all the activities managed at the same time on the site and therefore can identify and anticipate possible co-activities or simultaneous operations (SIMOPS). A particular attention is paid to possible co-activity between pre-commissioning, commissioning and start up works and operations of a live installation or plant area.

The SHE Manager establishes with the SIMOP Coordinator a specific SIMOPS plan or procedure which is endorsed by the Site Manager and the Commissioning Manager.

Deliverable: Simultaneous Operations procedure doc n. 122018-SPCC-C-SH-PR-0015

8.14.3. Occupational Hygiene

Contractor and subcontractors will put in place work methods and procedures to monitor the status at least of the following Occupational hygiene issues:

- Handling of chemicals;
- Dust monitoring;
- Noise monitoring;
- Vibration if needed;
- Hygiene;
- Thermal comfort.

Further details will be provided in the SPCC-C-SH-PR-0030 SHE Manual and into the approved EIA.

8.14.4. Alcohol and Drugs



Contractor is committed to making the working and living environments under its direct control healthy and safe. Such environments include all sites, structures, installations, vehicles and equipment owned, rented, leased or managed by Contractor.

In accordance with its SHE Policy, Contractor puts its greatest attention in protecting the health of its own employees and the safety of its own activities. Therefore the abuse of alcohol and drugs is absolutely prohibited in the premises of the Project. These abuses can result in damages to the health of a person, as well as to the properties of the PTTLNG whether it be a conscious or an unconscious act by the people concerned. In order to monitor the compliance with its policy of zero tolerance, Contractor carries out regular post-accident, based on reasonable suspicion, and critical activities D&A tests. The regular tests are part of the pre-employment and periodical fitness examinations, which each employee is due for on an annual basis, and aim to determine the presence of the following substances: Alcohol, Methamphetamine, Morphine, Cannabis, Amphetamine, Cocaine, and Benzodiazepine. Employees that reacted positive to any of these substances are not certified fit for work. The other tests will be conducted on all work sites if there is no discrepancy with the local legislation that treats this subject. In order to define the process of Drug & Alcohol testing on work sites, Contractor has developed a work instruction "Controls for the prevention of alcohol and drug abuse". This procedure is applicable to all work sites and to all employees, unless there is a local regulation that restricts such tests.

In order to ensure that all employees are aware of the health and disciplinary consequences of alcohol and drug use and abuse Contractor organizes information sessions aiming to enhance their knowledge on the issue. As part of its health promotion initiatives, Contractor also could develops and distributes leaflets with accurate, easy to understand, comprehensive information on the health effects of drug and alcohol use and abuse.

8.14.5. Smoking



Being aware of the enormous harmful potential of the habit of smoking, Contractor is committed to take all possible appropriate measures to induce decrease in smoking on the worksites, in order to maintain a good working and living environment and avoid discomfort, diseases or accidents caused by smoking. The approach methods are:

- organizing awareness campaigns
- discourage smoking by implementing no-smoking policy in all office areas
- placing signs wherever smoking is forbidden
- verifying whether they are obeyed.

8.14.6. Driving Risks

All Contractor and Subcontractor personnel who intend to drive for the Project must hold an appropriate and valid driving license for the vehicles, plant or equipment to be driven.

Local driving rules will be strictly followed by anyone who drives vehicles; in addition Site and Plant rules will be followed.

CONTRACTOR shall maintain and enhance the awareness of safe driving among its employees and SUBCONTRACTOR's employees and will provide vehicles in good operating condition.

Where applicable, CONTRACTOR must ensure that its employees, and the employees of SUBCONTRACTORs, receive adequate driving instruction and that visible steps are taken to maintain a safe standard of defensive driving.

- Vehicles shall be fit for the purpose, regularly inspected and well maintained in accordance with good driving practices.
- All seats of all vehicles must be equipped with seat belts at least 2 with a conversion for new vehicle equipped only of three fixed-point type.
- Vehicles with roofs, which cannot withstand a rollover, should be fitted with roll bars.
- Vehicles used for isolated areas shall be equipped with survival kits comprising a two-way radio, drinking water, first aid kit, etc.
- No unauthorized usage of transport shall be tolerated by CONTRACTOR or SUBCONTRACTOR staff. The nominated Work Safety and Health Officer(s) should ensure that all forms of transport are correctly fitted with the appropriate safety equipment.

CONTRACTOR and SUBCONTRACTORS shall undertake to ensure that all drivers comply with the following basic rules:

- Possess a valid driver license;
- Always wear a seat belt;
- Always observe traffic rules, especially speed limits;
- Never drive after consuming alcoholic drinks or certain medicines/drugs;
- Never drive when very tired;
- Take regular stops when driving long distances;
- Be sure that the vehicle is properly maintained and in good condition for the planned journey;
- Never overload the vehicle; and,
- Drive defensively.

CONTRACTOR and SUBCONTRACTOR must assure to have an:

1) Assessment completed on the experience for drivers, according to the type of vehicle they drive;
2) Two point safety belts are still accepted on buses and minivans, however, each new contract with passengers transportation companies and purchase contracts of passengers vehicles shall contain the requirement of three point safety belts on all seats.

The speed limit on all work sites 20 Km/h, in neighbored roads out of the site 30Km/h, in public roads less than 80Km/h as stated within the EIA, and populated areas should be announced and posted for passenger and material transport vehicles.

CONTRACTOR and SUBCONTRACTOR's driver couth by police on the public road violating traffic rules will be immediately dismissed by PROJECT; at site in violation of traffic rules, shall be punished with a project fine identified by Project and if an incident will result from the violation the immediately dismissed by PROJECT.

8.14.7. Stop Work Authority. Unsafe Conditions & Acts

It is important to note that, as indicated in the SHE policy, CONTRACTOR, PTTLNG and SUBCONTRACTORS are entitled to stop any activity if it is believed to involve any hazard. This "Stop work authority" is granted to all project personnel.

Non-compliance with the requirements of the SHE Management Plan(s) shall be considered as misconduct for which PTTLNG or its Project Management Consultant (PMC) shall have the right to require CONTRACTOR to remove offending personnel from Site. In certain cases, PTTLNG may suspend work that is considered by PTTLNG as unsafe, until compliance with safety regulations has been re-established.

On the request of PTTLNG, any unsafe operation/practice by CONTRACTOR or its SUBCONTRACTOR shall be stopped immediately and rectified at CONTRACTOR or its SUBCONTRACTOR cost to the satisfaction of PTTLNG. For such suspension of Work, CONTRACTOR is not allowed to claim the delay of the planned schedule.

If, during the execution of Work, conditions at a particular location within Site are deemed unsafe by CONTRACTOR, he shall notify PTTLNG immediately.

PTTLNG shall be responsible for verifying that Site is safe before Work recommences.

8.14.8. Languages Requirements

The language difficulties with the multinational workforce are identified and the worksite ensures information is provided in a manner that can be understood by all concerned. Worksite utilizes multiple meetings and multiple languages if required to assure effective communication with each audience.

- The PROJECT Language is English for PROJECT documents and all managers.
- Thai will be used where needed to communicate with workforce.
- In particular, safety booklets, jobsites signs & road signs, Permit to work forms will be bilingual in Thai & English.

8.14.9. Specific PPEs

All the involved person to the activities shall wear PPE according to their job and risk assessment. It is mandatory to use the following personal protection and not limited with list below:

- Head protection
- Foot protection
- Hand protection
- Eye and face protection
- Overall, if necessary
- Special gas mask, if necessary
- All PPE required to enter confined spaces
- All PPPE required to rescue activities
- Cryogenic personal protective equipments

8.14.10. Tools and Communication devices

Ex-proof and non-spark equipments include radios and mobile phones will be in use according to atmosphere and area identification. Providing of equipments to all involved team is responsibility of employer of related staff.

9. PREPARATION OF COMMISSIONING ACTIVITIES

All pre-commissioning, commissioning and start up activities have specific SHE Procedures that have been indicated in appendix of the present document.

Commissioning Manager or his Deputy, for each pre-commissioning, commissioning and start up activity, shall prepare a specific job procedure (each system will have a pre-commissioning, commissioning and start up procedure) where indicates:

- Description of the specific activity
- Lines, system and equipment involved
- Tightness Test
- N2 inert and dry out
- Loop test/functional tests
- Mechanical runs
- Blinds to install/remove.
- Chemical substances (first fills) in use that may cause damage to human or environment.
- Ensure all temporary equipment used for pre-commissioning, commissioning and start up is certified and fit for purpose.

This procedure shall be examined by SHE staff that controls that and includes the safety precautions as indicated in the SHE Plan for Commissioning and Start Up and also checks any overlapping with other activities; in case of overlapping the SHE staff before authorizing the work shall follow the procedure about simultaneous operation "Simops Procedure". And also this document should attached to permit to work for each activity.

According to type of works, hazards associated, extension of areas involved, this job procedure shall be submitted to SHE staff that carried out the relative risk assessment, within seven days before the start of the activity.

If chemicals are used, the Commissioning Manager, with the supervision of COSHEC, shall include a specific plan that illustrates the action to take in place if any spillage occur. Refer to "Waste Management Plan for Commissioning".

Moreover a specific Commissioning Emergency Response Plan shall be prepared. More hazardous works require an evacuation test that shall be carried out with the direct supervision of COSHEC.
This procedure, after the control of SHE staff, shall be submitted to Subcontractor authority and a copy of it must be attached to the relative Permit to Work.

10. LIST OF COMMISSIONING AND START UP APPENDIX

Here below are listed the SHE procedures for Commissioning and Start Up activities:

APPENDIX A – PRECOMMISSIONING APPENDIXES
Here are listed the SHE procedures for Pre-Commissioning activities attached to this plan:

- Appendix A1: Air Blowing
- Appendix A2: Equipment inspection and closure
- Appendix A3: Chemical handling and first filling
- Appendix A4: Water flushing
- Appendix A5: Lube oil and seal oil flushing
- Appendix A6: Pig Cleaning
- Appendix A7: Uncoupled running motor test
- Appendix A8: Electrical substation energization

APPENDIX B – COMMISSIONING AND START UP APPENDIXES

Here are listed the SHE procedures for Commissioning activities attached to this plan:

- Appendix B1: Chemical cleaning
- Appendix B2: System inerting
- Appendix B3: Tightness test
- Appendix B4: Vacuum Tightness test
- Appendix B5: Piping Dry out and preservation
- Appendix B6: Air cooler preparation for Start up
- Appendix B7: Reciprocating compressor preparation for Start up
- Appendix B8: Reciprocating pump preparation for Start up
- Appendix B9: Screw pump preparation for Start up
- Appendix B10: Screw compressor preparation for Start up
- Appendix B11: Diesel engine preparation for Start up
- Appendix B12: Diesel generator preparation for Start up
- Appendix B13: Gas Turbine Generator (GTG) preparation for Start up
- Appendix B14: Mixer preparation for Start up
- Appendix B15: Ground flare preparation for Start up
- Appendix B16: Blower preparation for Start up
- Appendix B17: Centrifugal pump preparation for Start up

ANNEX 1
CONTRACTOR INTERNAL SAFETY INDICATORS

Month: …… Year: ……		Company…… Project / Site / ……			Compiled by:	Date:
GENERAL SUMMARY SAFETY INDICATORS	Monthly total (SPCC)	Monthly total (Subcontractor)	Monthly total (SPCC& Subcontractor)	Total since the beginning of Project / year° (SPCC)	Total since the beginning of Project / year° (Subcontractor)	Total since the beginning of Project / year° (SPCC & Subcontractor)
Average Manpower						
Total Worked Manhours						
No. of Fatal Accidents						
No. of Lost Time Injuries						
No. of Work Restricted Cases						
No. of Medical Treatment Cases						
No. of First Aid Cases						
No. of Commuting Injuries						
No. of Near Miss						
No. of Lost Workdays						

No. of Restricted Workdays						
No. of Road Traffic Accident (RTA)						
Km Driven						
Lost Time Injury Frequency Rate (LTIFR)						
Total Recordable Frequency Rate (TRFR)						
Severity Rate (SR)						
NOTE:			SHE Manager		Site Manager	